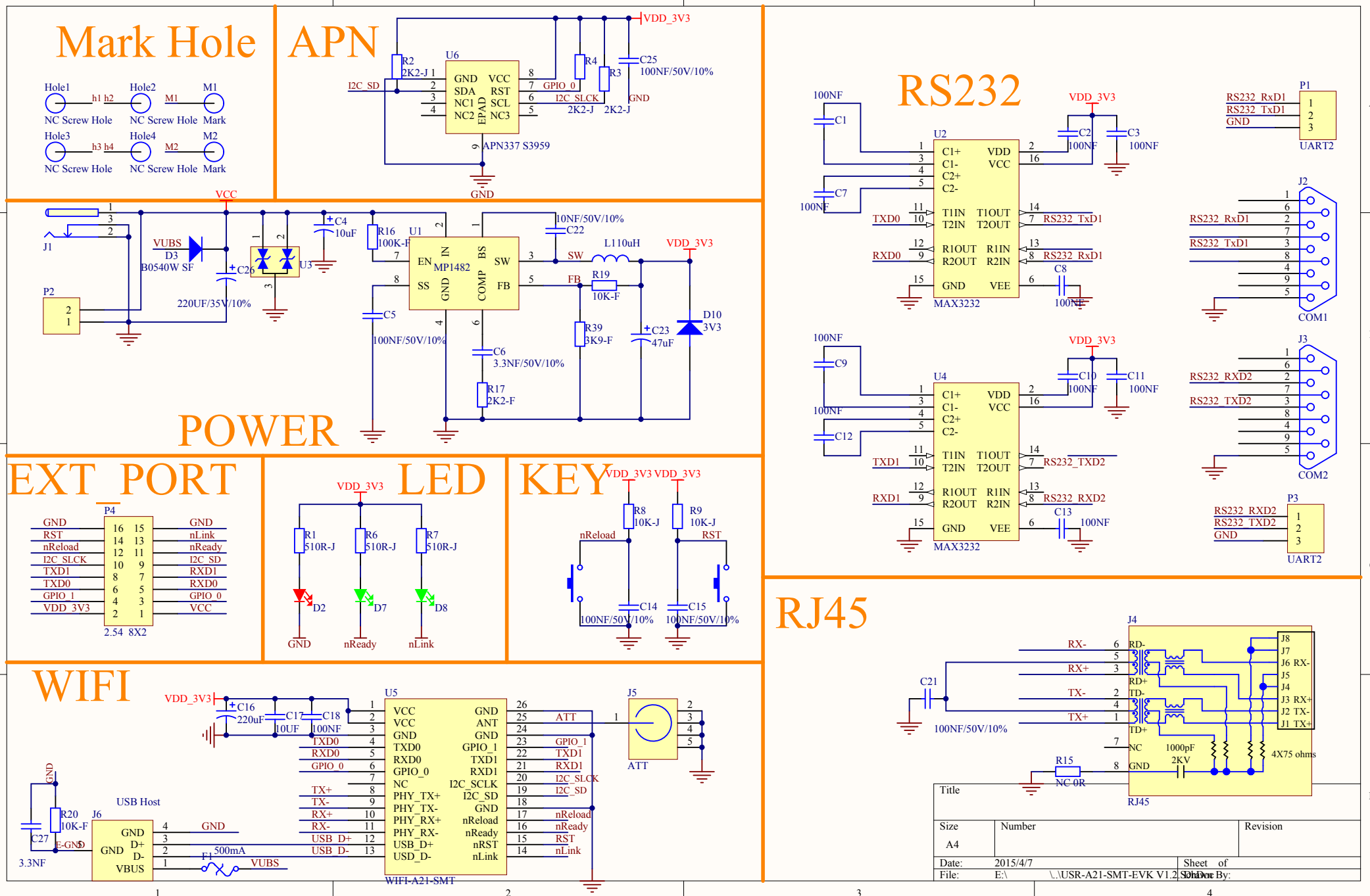
Mark Hole
Hole1
Hole2
M1
NC Screw Hole
NC Screw Hole
Mark
Hole3
Hole4
M2
NC Screw Hole
NC Screw Hole
Mark
APN
U6
APN337 S3959
VDD_3V3
GND
I2C_SD
GPIO_0
I2C_SLCK
R2 2K2-J
R4 2K2-J
R3 2K2-J
C25 100NF/50V/10%
POWER
J1
P2
VUBS
D3 B0540W SF
C26 220UF/35V/10%
U3
C4 10uF
R16 100K-F
U1 MP1482
EN IN BS SW SS GND COMP FB
C22 10NF/50V/10%
L110uH
SW
FB
R19 10K-F
R39 3K9-F
C23 47uF
D10 3V3
C5 100NF/50V/10%
C6 3.3NF/50V/10%
R17 2K2-F
VCC
RS232
U2 MAX3232
C1+ C1- C2+ C2- VDD VCC T1IN T2IN T1OUT T2OUT R1OUT R2OUT R1IN R2IN GND VEE
C1 100NF
C7 100NF
C2 100NF
C3 100NF
C8 100NF
TXD0
RXD0
RS232_TxD1
RS232_RxD1
P1 UART2
RS232_RxD1
RS232_TxD1
GND
J2 COM1
U4 MAX3232
C9 100NF
C12 100NF
C10 100NF
C11 100NF
C13 100NF
TXD1
RXD1
RS232_TXD2
RS232_RXD2
J3 COM2
P3 UART2
RS232_RXD2
RS232_TXD2
GND
EXT_PORT
P4
GND
RST
nReload
I2C_SLCK
TXD1
TXD0
GPIO_1
VDD_3V3
nLink
nReady
I2C_SD
RXD1
RXD0
GPIO_0
VCC
2.54 8X2
LED
VDD_3V3
R1 510R-J
R6 510R-J
R7 510R-J
D2
D7
D8
GND
nReady
nLink
KEY
VDD_3V3 VDD_3V3
R8 10K-J
R9 10K-J
nReload
RST
C14 100NF/50V/10%
C15 100NF/50V/10%
RJ45
J4
RX-
RX+
TX-
TX+
RD-
RD+
TD-
TD+
NC
GND
C21 100NF/50V/10%
1000pF 2KV
R15 NC 0R
4X75 ohms
J8 J7 J6 RX- J5 J4 J3 RX+ J2 TX- J1 TX+
WIFI
U5 WIFI-A21-SMT
VDD_3V3
C16 220uF
C17 10UF
C18 100NF
VCC GND ANT TXD0 GPIO_1 RXD0 TXD1 GPIO_0 RXD1 NC I2C_SCLK PHY_TX+ I2C_SD PHY_TX- PHY_RX+ nReload PHY_RX- nReady USB_D+ nRST USD_D- nLink
ATT
GPIO_1
TXD1
RXD1
I2C_SLCK
I2C_SD
nReload
nReady
RST
nLink
TX+
TX-
RX+
RX-
USB_D+
USB_D-
J5 ATT
USB Host
J6
GND D+ D- VBUS
R20 10K-F
C27 3.3NF
E-GND
F1 500mA
VUBS
Title
Size A4
Number
Revision
Date: 2015/4/7
File: E:\ \..\USR-A21-SMT-EVK V1.2.SchDoc
Sheet of
Drawn By: