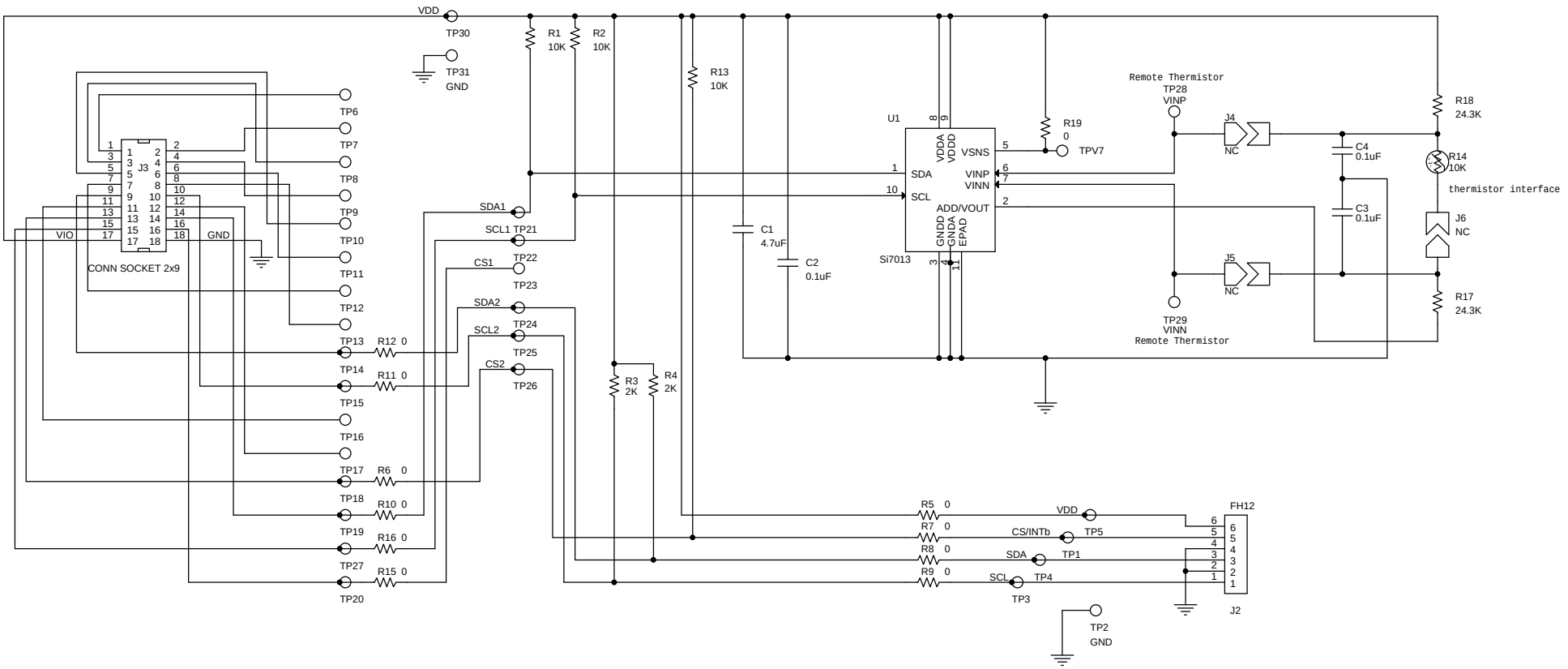

400 W Cesar Chavez
Austin, TX 78701

Title
Si7013 UDP port card

Size	Document Number	Rev
B	<Doc>	1.0

Date: Monday, April 22, 2013 Sheet 1 of 2