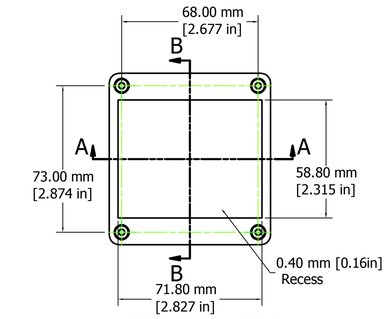

ASSEMBLY - TOP

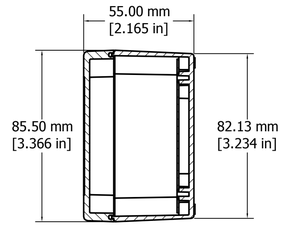

SECTION B-B

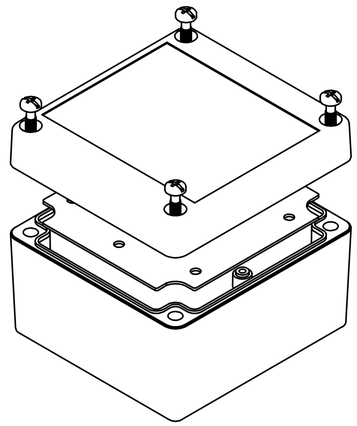

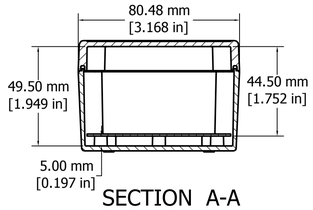

SECTION A-A

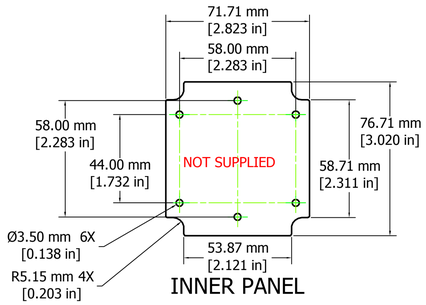

INNER PANEL

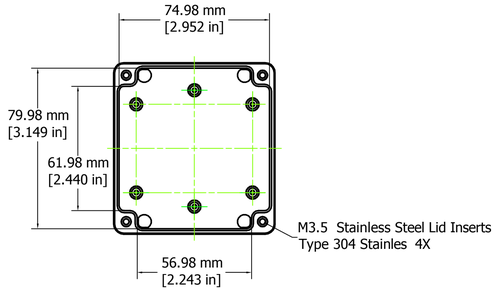

BOX - INSIDE

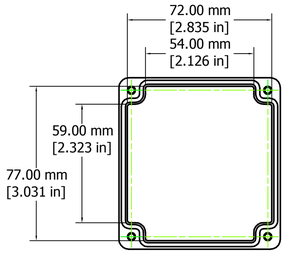

LID - INSIDE

Dato: 29. Mar 2009	BERNIC A/S		
	Materiale: ABS (UL94-HB)		
Tol.: DS/ISO 2768 - m		Farve: Grey	
Emne nr.: 1061		Fil: bc_1061_assem.DWG	
Betegnelse: Enclosure, type 1061			