FOR-1350 Rev.1.0

REVISION RECORD				
REV	ECN	DESCRIPTION	DRFT	DATE

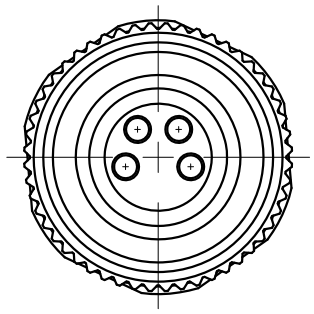

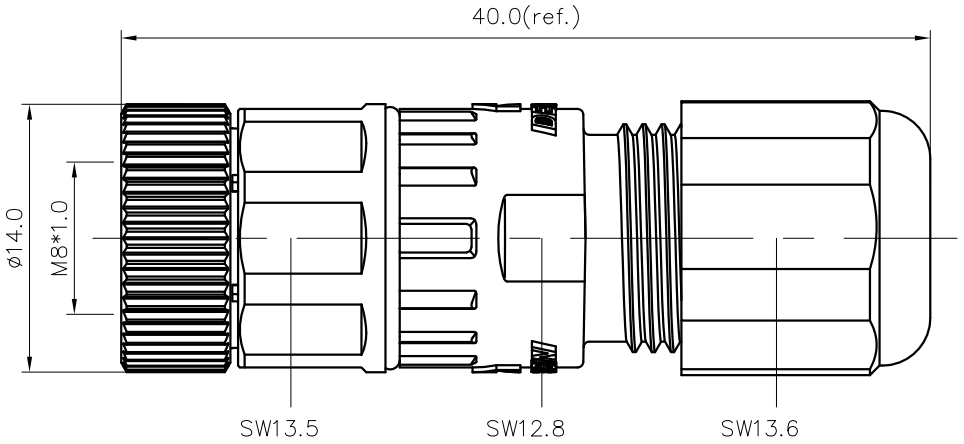

PB-M8A-XXP-FF-SL7001-00A(H)

Pin number: 03,04

NOTES:

1. Rated voltage/current : 3pin: 60V / 3A
   4pin: 60V / 3A
2. Withstanding voltage : 3,4pin: AC850V/1Min
3. Levels of protection: IP67
4. Wire range : 3pin: 24~22AWG/0.25~0.34mm^2
   4pin: 24~22AWG/0.25~0.34mm^2
5. Cable range : 4~6mm
6. Wire connection mode: screw
7. Operating temperature: −40°C~+85°C
8. RoHS Compliance
9. Tolerance : ±0.5mm

3pin A Coding	4pin A Coding
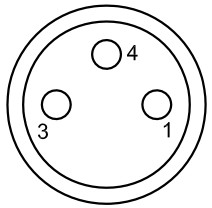	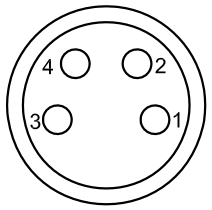
Pin Assignment Front View	Pin Assignment Front View

DETACHED LISTS

PART NO.: PBM8AXXPFFSL700100AH	DEGSON® 宁波高松电子有限公司 NINGBO DEGSON ELECTRICAL CO., LTD		
APPD:	NAME: PB-M8A-XXP-FF-SL7001-00A(H)		
CHKD:			
DRFT: SQ 2019.05.17	TITLE: CUSTOMER DRAWING	REV	D0−1
THIRD ANGLE PROJECTION	DRAWING NO.: XXXXXXX−XX−CXX	SHEET	1/1
	MM (INCH) DO NOT SCALE DRAWING	SCALE	1:1