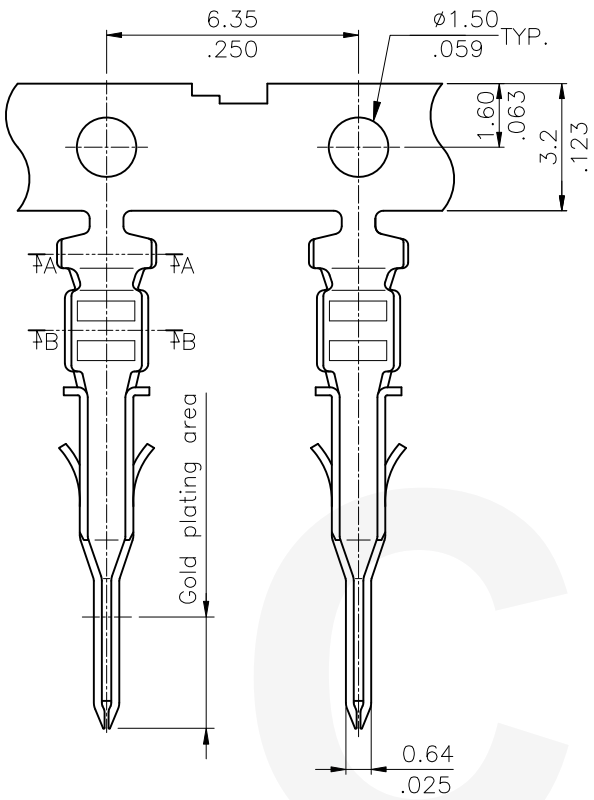

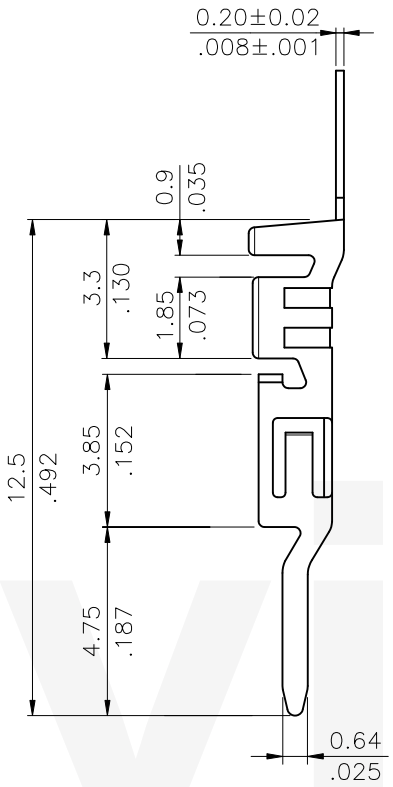

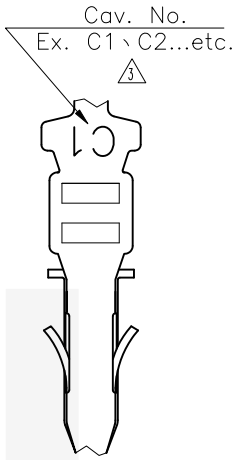

Ordering Code:

CP35 TN* * P EP
① ② ③ ④ ⑤

① Series No.
② Accept wire gage:
TN1= AWG #26 ~ #30
TN2= AWG #20 ~ #24
③ Plating code:
1= Tin plated over Nickel
A= Selective Gold flash plated over 50μ" Nickel
B= Selective 15μ" Gold plated over 50μ" Nickel
C= Selective 30μ" Gold plated over 50μ" Nickel
4 ④ Material : P= Phosphor Bronze
⑤ Style: EP= Plug terminal

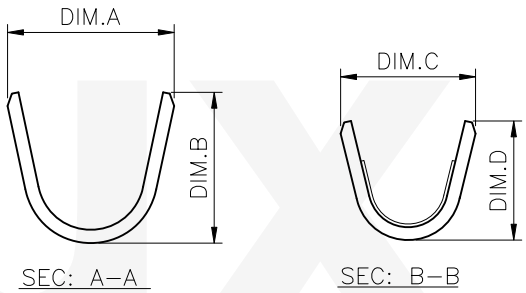

5

P/N	Wire Gauge	Insulation Diameter	Finish	Reel Q'TY
CP35TN11PEP	AWG#26~#30	1.35 (.053) MAX.	2.03μm (80μinch) Min. Tin plated over 0.76μm (30μinch) Nickel	12,000 PCS
CP35TN21PEP	AWG#20~#24	1.85 (.073) MAX.		
CP35TN1APEP	AWG#26~#30	1.35 (.053) MAX.	Selective gold flash on surface contact area over 1.27μm (50μinch) Nickel	
CP35TN2APEP	AWG#20~#24	1.85 (.073) MAX.		
CP35TN1BPEP	AWG#26~#30	1.35 (.053) MAX.	Selective 0.38μm (15μinch) gold on surface contact area over 1.27μm (50μinch) Nickel	
CP35TN2BPEP	AWG#20~#24	1.85 (.073) MAX.		
CP35TN1CPEP	AWG#26~#30	1.35 (.053) MAX.	Selective 0.76μm (30μinch) gold on surface contact area over 1.27μm (50μinch) Nickel	
CP35TN2CPEP	AWG#20~#24	1.85 (.073) MAX.		

CVILUX CORP
2018.08.23
ISSUED

2

P/N	DIM.A	DIM.B	DIM.C	DIM.D
CP35TN1*PEP	2.1 (.083)	1.9 (.075)	1.7 (.067)	1.5 (.059)
CP35TN2*PEP	2.5 (.098)	2.4 (.094)	2.1 (.083)	2.0 (.079)

RoHS Compliant

SYM	NAME	DATE	REVISIONS
5	Sandy	8/6-18'	ECNT118180
4	Sun	6/23-16'	ECRB116035/ECNT116136
3	Enya	11/07-13'	ECNT113108/ECNT113091/ECRT113022
2	Sandy	3/17-08'	ECN08140

		DATE
DRAWN BY:	Sandy	8/7-18'
ENGINEER:	Sun	8/15-18'
CHECKED BY:	Eisley	8/16-18'
APPROVED BY:	Eisley	8/16-18'

UNIT: mm / inch

TOLERANCE UNLESS OTHERWISE SPECIFIED

.X ±0.20/.008	X.° ± 1°
.XX ±0.10/.004	.X° ±
.XXX ±0.05/.002	.XX° ±

TITLE: CP35 MALE CRIMP TERMINAL

MATERIAL:

FINISH:

瀚荃股份有限公司
CviLux Corporation

DRAWING NO.	CP3504SJ	PART NO.	CP35TN**PEP
SCALE	5 / 1	SHEET 1 OF 1	