Materials:

* Insulator: Glass filled polyester UL 94V-0
* Contacts: Copper alloy
* Shell: Steel, Nickel plated as standard

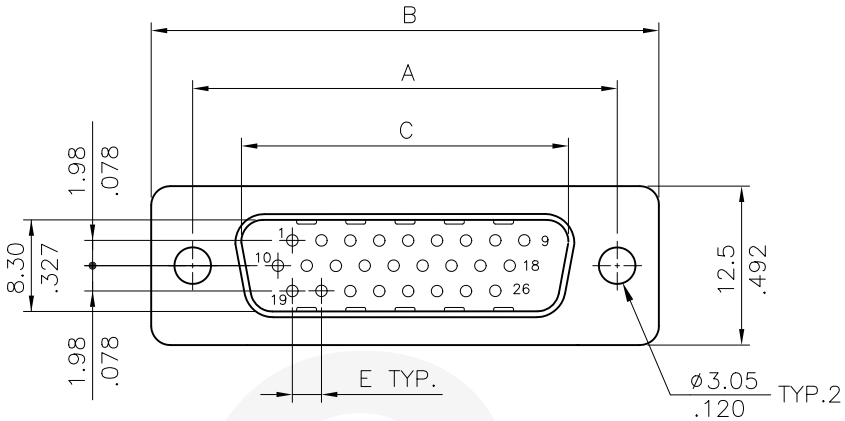

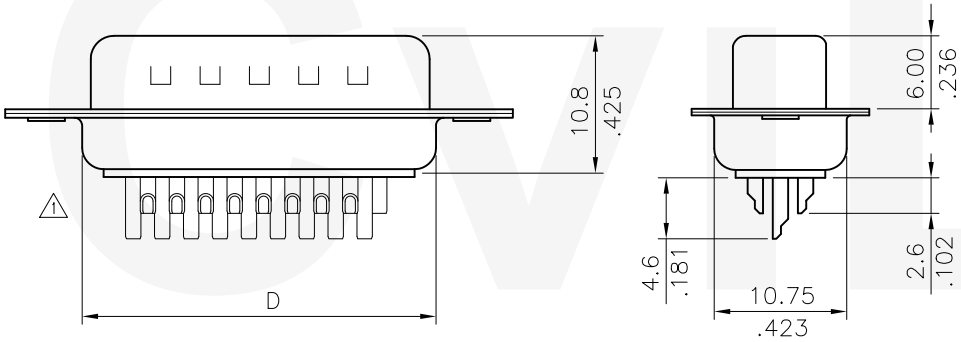

Circuits	Dimension				
	A	B	C	D	E
15	25.00(.984)	30.8(1.213)	16.92(.666)	19.20(.756)	2.29(.090)
26	33.32(1.312)	39.2(1.543)	25.25(.994)	27.70(1.091)	2.29(.090)
44	47.04(1.852)	53.1(2.091)	38.96(1.534)	41.10(1.618)	2.29(.090)
62	63.50(2.500)	69.4(2.732)	55.42(2.182)	57.30(2.256)	2.41(.095)

Ordering Code :

CD01 26 P A 1 00
① ② ③ ④ ⑤ ⑥

① Series No.
② No. of Circuits
③ Concact type: P= Plug(Male)
④ Plating code:
2= Gold flash plated over Nickel
A= Selective Gold flash plated over Nickel
B= Selective 0.38μm(15μ") Gold plated over 1.27μm(50μ") Nickel
C= Selective 0.76um(30μ") Gold plated over 1.27μm(50μ") Nickel
⑤ Color: 1= Black, 7= Blue, 0= White
⑥ Mouting style:
00= With ø3.05mm holes on shell(Standard)
A0= Riveted #4-40 UNC close nuts on front shell
B0= Riveted #4-40 UNC open nuts on front shell
C0= Riveted #4-40 UNC open nuts on rear shell

RoHS Compliant

Mounting Style

Code	00	Code	A0	Code	B0	Code	C0
		DIM. L= 5.8mm		DIM. L= 4.0mm		DIM. L= 4.0mm	

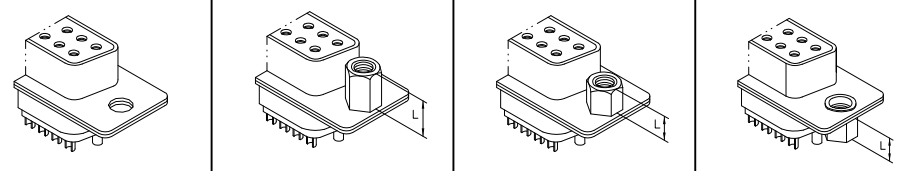

SYM	NAME	DATE	REVISIONS
4			
3			
2	Ken	3/12-18'	ECRT117079/ECNT118047
1	Ken	7/19-16'	ECRT116029/ECNT116156

CVILUX CORP 2018.03.22 ISSUED

		DATE
DRAWN BY:	Ken	3/12-18'
ENGINEER:	Sun	3/13-18'
CHECKED BY:	Eisley	3/15-18'
APPROVED BY:	Eisley	3/15-18'

UNIT: mm / inch

TOLERANCE UNLESS OTHERWISE SPECIFIED

X ± 0.30/.012	X.° ± 1°
XX ± 0.20/.010	.X° ±
XXX ± 0.10/.004	.XX° ±

TITLE: HIGH-DENSITY D-SUB SOLDER CUP MALE CONNECTOR

MATERIAL:

FINISH:

瀚荃股份有限公司
CviLux Corporation

DRAWING NO.	CD0102SH	PART NO.	CD01**P****
SCALE	2 / 1	SHEET 1 OF 1	