GSM Antenna

JCG110

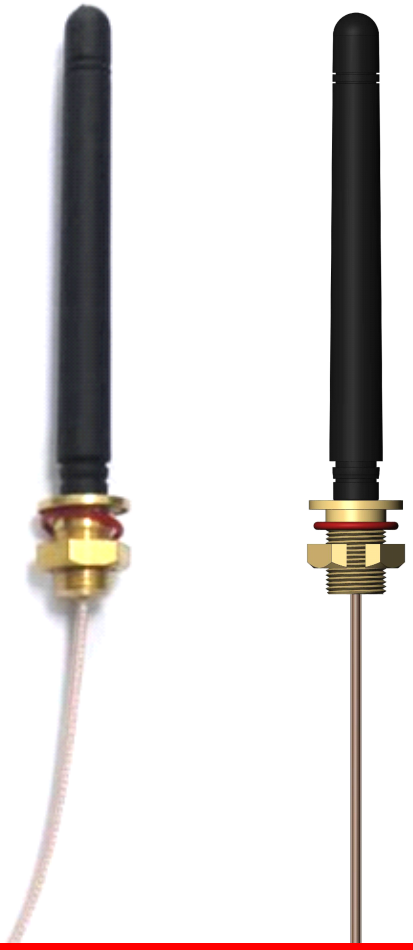

DIMENSIONS

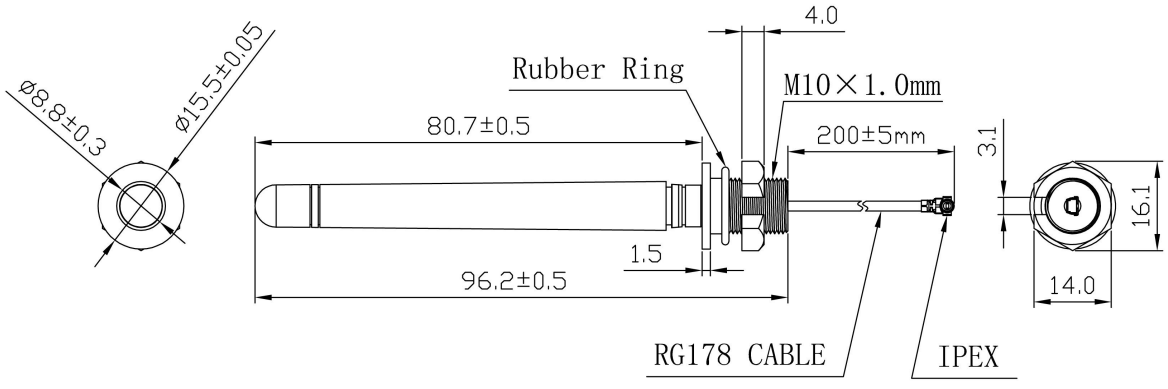

Unit: mm

SPECIFICATIONS

Item		Specifications
Antenna	Frequency Range	880~960/1710~2170MHz
	Polarization	Linear
	Gain	2dBi（Zenith）
	V.S.W.R（min）	＜2.0
	Impendance	50Ω
Mechanical	Cable	RG178
	Connector	IPEX or others
	Mounting Method	Screw
Environmental	Operating Temperature	-40℃~+85℃
	Relative Humidity	Up to 95%
	Vibration	10 to 55Hz with 1.5mm amplitude 2hours
	Environmentally Friendly	ROHS Compliant

Radiation Pattern

