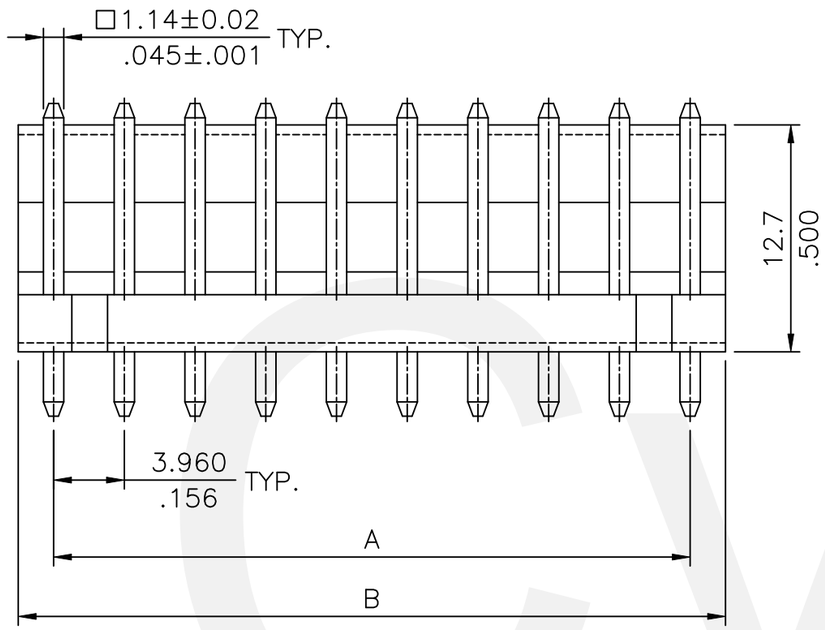

Two Gate, on the left ahd right

06~20P

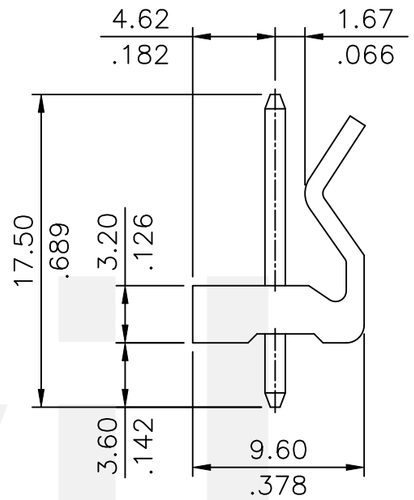

Material:

* Insulation: Nylon 66 UL 94V-2
  Color Nature
* Contact: Brass

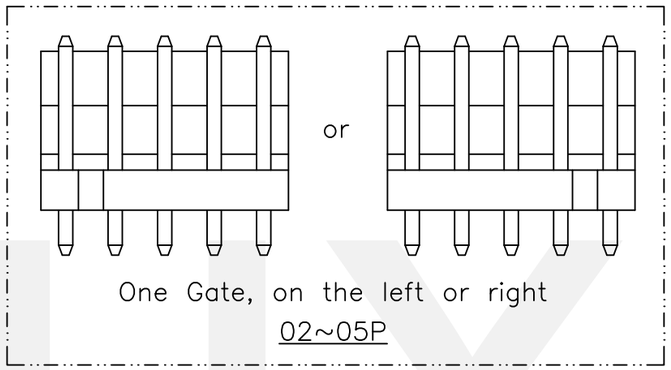

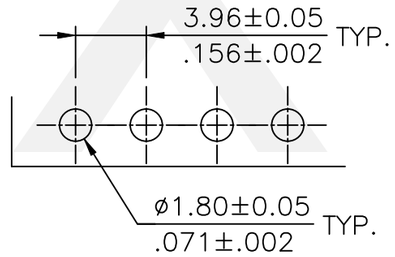

Recommended P.C. Board Layout

Circuits	Dimension		Circuits	Dimension	
	A	B		A	B
2	3.96(.156)	7.92(.312)	12	43.56(1.715)	47.52(1.871)
3	7.92(.312)	11.88(.468)	13	47.52(1.871)	51.48(2.027)
4	11.88(.468)	15.84(.624)	14	51.48(2.027)	55.44(2.183)
5	15.84(.624)	19.80(.780)	15	55.44(2.183)	59.40(2.339)
6	19.80(.780)	23.76(.935)	16	59.40(2.339)	63.36(2.494)
7	23.76(.935)	27.72(1.091)	17	63.36(2.494)	67.32(2.650)
8	27.72(1.091)	31.68(1.247)	18	67.32(2.650)	71.28(2.806)
9	31.68(1.247)	35.64(1.403)	19	71.28(2.806)	75.24(2.962)
10	35.64(1.403)	39.60(1.559)	20	75.24(2.962)	79.20(3.118)
11	39.60(1.559)	43.56(1.715)			

Ordering Code:

CI51 ** P 1 V 00

① ② ③ ④ ⑤ ⑥

① Series No.
② No. of Circuits:
③ P= Pin header
④ Plating:
  1= 3.05μm(120μ") Min. Tin over Nickel
⑤ Type: V= Straight
⑥ Other option: 00= Standard

Halogen-Free

Tin-Lead Process

RoHS Compliant

SYM	NAME	DATE	REVISIONS
4			
3			
2	Sun	2/15-24'	ECNT124022/ECR0124003
1	Casey	3/9-05'	ECN05067/ECR05015-5

CviLux Corp. 2025/02/10 ISSUED

		DATE
DRAWN BY:	Sun	2/10-25'
ENGINEER:	Sun	2/10-25'
CHECKED BY:	Eisley	2/10-25'
APPROVED BY:	Eisley	2/10-25'

UNIT: mm / inch

TOLERANCE UNLESS OTHERWISE SPECIFIED

.X ± 0.38/.015	X.° ± 1°
.XX ± 0.25/.010	.X° ±
.XXX ± 0.10/.004	.XX° ±

TITLE: 3.96MM(.156") STRAIGHT HEADERS

MATERIAL:

FINISH:

瀚荃股份有限公司
CviLux Corporation

DRAWING NO.	CI5102SE	PART NO.	CI51**P1V00
SCALE	2 / 1	SHEET 1 OF 1	