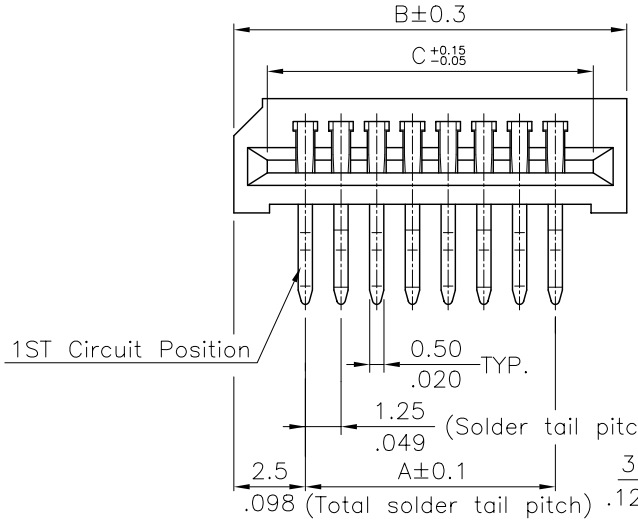

A = 1.25 x No. of Spaces
B = A + 5.0
C = A + 2.66
* Available in 3 through 36 circuits

Material:
* Insulation: PBT. with 15% GF.
Color Black
* Contact: Phosphor Bronze

Ordering Code

CF12	**	1	H0	T	0
①	②	③	④	⑤	⑥

① Series No.
② No. of Circuits
③ Plating code:
1= 2.54μm(100μ") Tin over
0.76μm(30μ") Nickel
④ Contact type : H0= Right angle type
⑤ Packing : T= Tube Packaged
⑥ Other option: 0= Standard

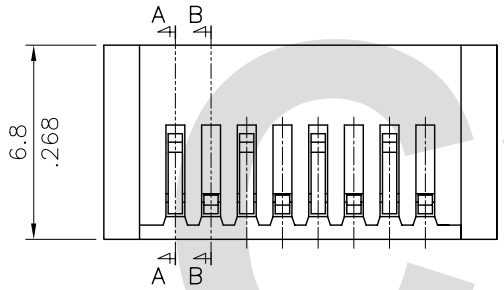

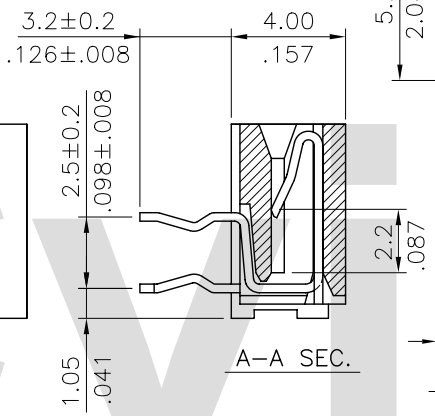

A–A SEC.

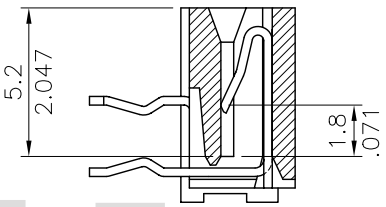

B–B SEC.

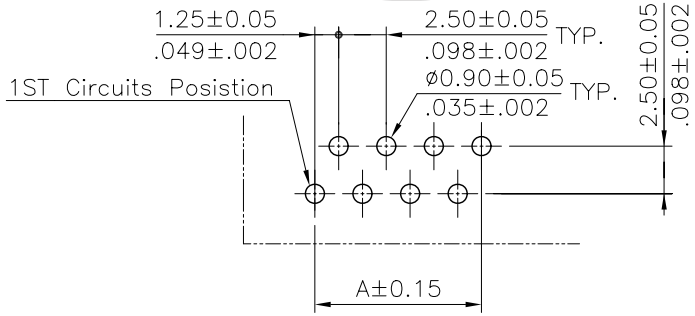

Recommended P.C. Board Layout

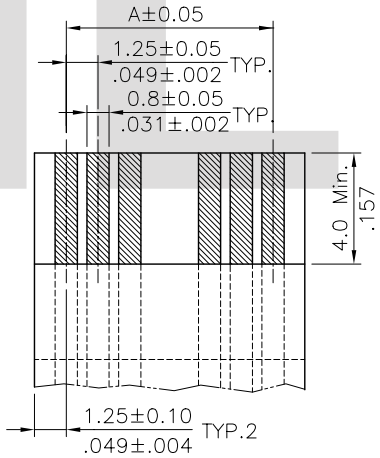

* ACCOMMODATED FFC

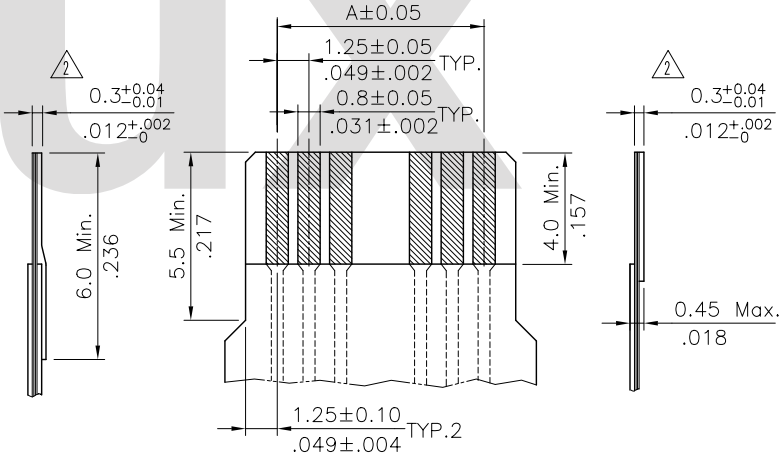

* ACCOMMODATED FPC

RoHS Compliant

SYM	NAME	DATE	REVISIONS
4			
3			
2	Sandy	9/22-07'	ECN07381/ECR07065-1
1	Eisley	1/9-06"	ECN06010

CVILUX CORP. 2007.10.02 ISSUED

		DATE
DRAWN BY:	Sandy	9/22-07'
ENGINEER:	Eisley	9/28-07'
CHECKED BY:	David	9/28-07'
APPROVED BY:	Alex	9/28-07'

UNIT: mm / inch

TOLERANCE UNLESS OTHERWISE SPECIFIED

.X ± 0.15/.006	X.° ± 1°
.XX ± 0.10/.004	.X° ±
.XXX ± 0.05/.002	.XX° ±

TITLE: 1.25mm(.049") R/A DIP TYPE LIF FFC/FPC CONNECTOR

MATERIAL:

FINISH:

瀚荃股份有限公司
CviLux Corporation

DRAWING NO.	CF1202SE	PART NO.	CF12**1H0T0
SCALE	3 / 1	SHEET 1 OF 1	