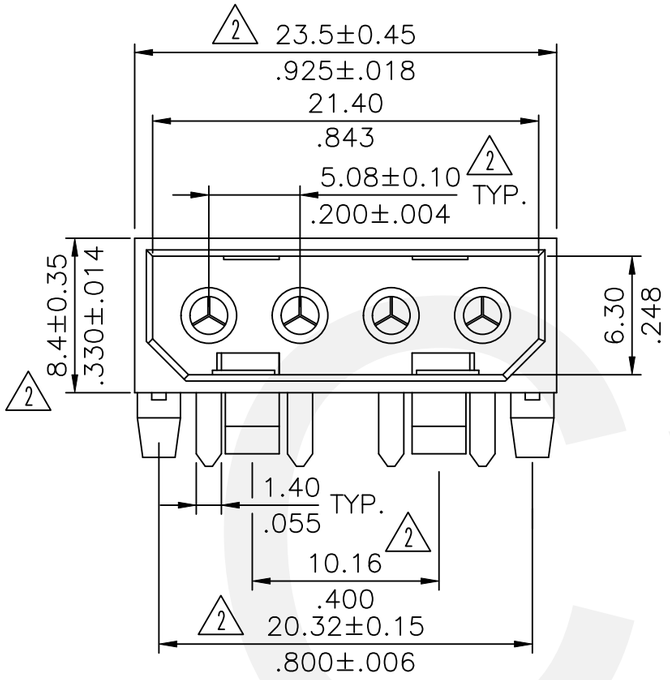

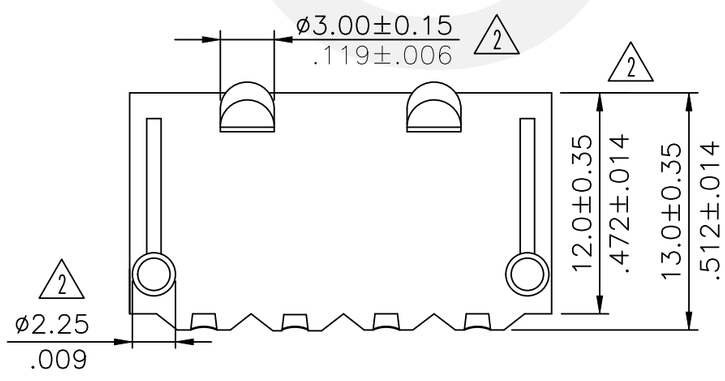

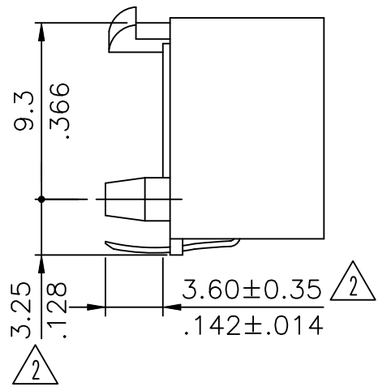

Material :
* Insulation : Nylon 66 UL 94V-2
  Color Nature
* Contact : Pre-tinned Brass

Ordering Code:

CP33	04	P	1	H	00
①	②	③	④	⑤	⑥

① Series No.
② No. of Circuite: 4 Circuits
③ Concact type: P= Male
△2 ④ Contact plated:
1= Tin plated over Nickel
⑤ Tail style: H= Right angle
⑥ Option: 00= Standard

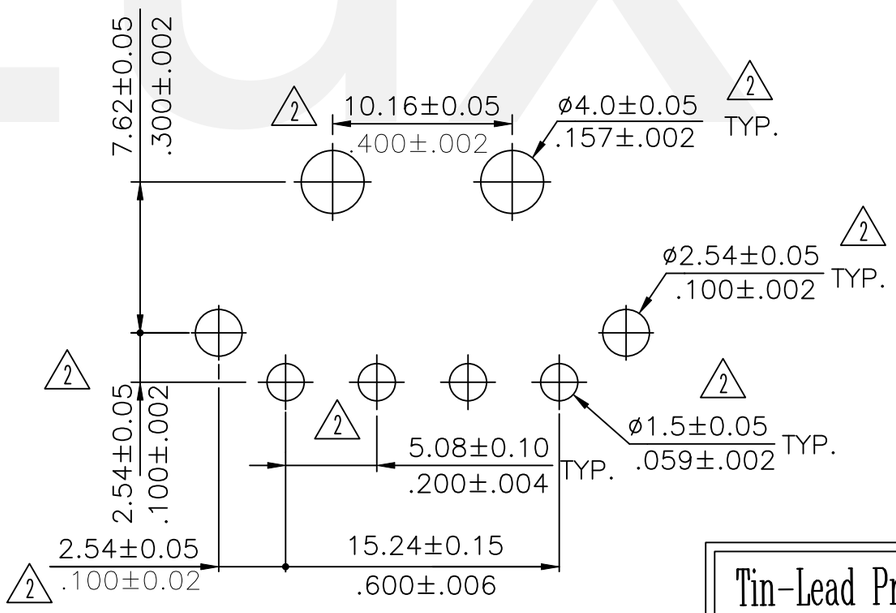

Recommended P.C Board layout

Tin-Lead Process

RoHS Compliant

SYM	NAME	DATE	REVISIONS
△4			
△3			
△2	Jack	12/6/23'	ECRT123076/ECNT12325
△1	SUN	12/6/03'	ECR03025-0/ECN03302

CviLux Corp. 2023/12/19 ISSUED

DRAWN BY:	Jack	12/6-23'
ENGINEER:	Sun	12/6-23'
CHECKED BY:	Eisley	12/6-23'
APPROVED BY:	Eisley	12/6-23'

UNIT: mm / inch

TOLERANCE UNLESS OTHERWISE SPECIFIED

.X ± 0.40 / .016	X.° ± 5°
.XX ± 0.30 / .012	.X° ±
	.XX° ±

TITLE: 5.08MM(.200") RIGHT ANGLE POWER HEADER CONNECTORS

MATERIAL:

FINISH:

瀚荃股份有限公司
CviLux Corporation

DRAWING NO.	CP3303SE	PART NO.	CP3304P1H00
SCALE	2 / 1	SHEET 1 OF 1	