Note:

1. Material:
   * Insulation: Nylon 66 UL 94V-0
     Color Nature
   * Contact: Brass

△4 △3 2. For Lead Free Wave Flow Process

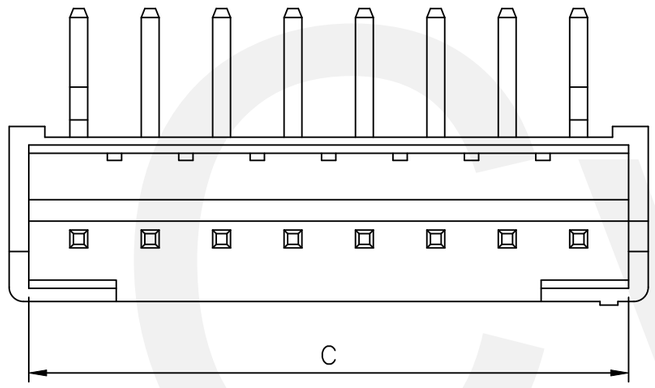

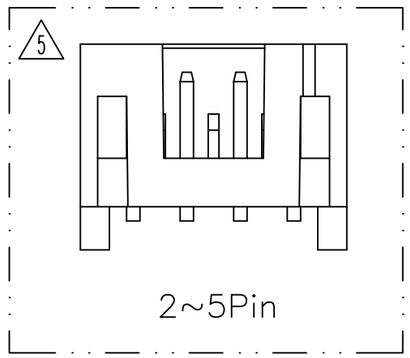

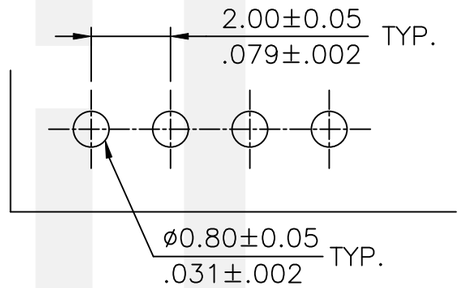

Recommended P.C. Board Layout

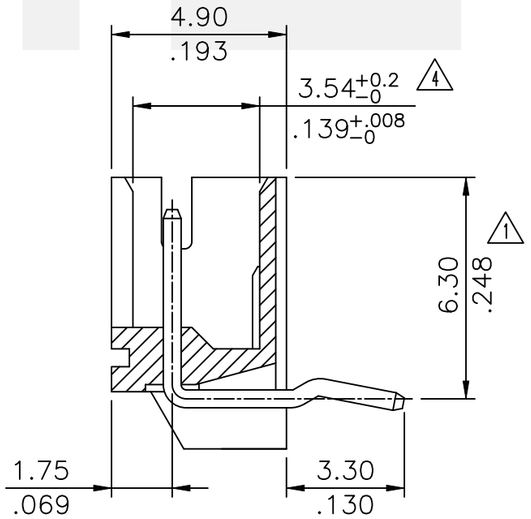

Ordering Code:

CI01 ** P 1 H K0
① ② ③ ④ ⑤ ⑥

① Series No.
② No. of Circuits:
③ P= Pin header
④ Plating: 1= 3.05μm(120μ") Min. Tin over 0.76μm(30μ") Nickel
⑤ Type:H= Right angle
⑥ Other option: K0= With Pin Kinked

Circuits	Dimension		
	A	B	C
2	2.00(.079)	6.0(.236)	4.70(.185)
3	4.00(.157)	8.0(.315)	6.70(.264)
4	6.00(.236)	10.0(.394)	8.70(.343)
5	8.00(.315)	12.0(.472)	10.70(.421)
6	10.00(.394)	14.0(.551)	12.90(.508)
7	12.00(.472)	16.0(.630)	14.90(.587)
8	14.00(.551)	18.0(.709)	16.90(.665)
9	16.00(.630)	20.0(.787)	18.90(.774)
10	18.00(.709)	22.0(.866)	20.90(.823)
11	20.00(.787)	24.0(.945)	22.90(.902)
12	22.00(.866)	26.0(1.024)	24.90(.980)
13	24.00(.945)	28.0(1.102)	26.90(1.059)
14	26.00(1.024)	30.0(1.181)	28.90(1.138)
15	28.00(1.102)	32.0(1.260)	30.90(1.217)
△2 16	30.00(1.181)	34.0(1.338)	32.90(1.295)

Halogen-Free | Lead Free Process | RoHS Compliant

SYM	NAME	DATE	REVISIONS
△5	Eric	4/8-24'	ECNT124089/ECRT124009
△4	Sun	7/20-17'	ECNT117146/ECRT117041
△3	Enya	3/6-13'	ECN13056-0/ECR13007-1
△2	Sandy	8/05/04'	ECN04300

CviLux Corp
2024/04/09
ISSUED

		DATE
DRAWN BY:	Eric	4/8-24'
ENGINEER:	Eric	4/8-24'
CHECKED BY:	Eisley	4/8-24'
APPROVED BY:	Eisley	4/8-24'

UNIT: mm / inch

TOLERANCE UNLESS OTHERWISE SPECIFIED

.X ± 0.30/.012	X.° ± 1°
.XX ± 0.20/.008	.X° ±
.XXX ± 0.10/.004	.XX° ±

TITLE: 2.00MM(.079") RIGHT ANGLE HEADER

MATERIAL:

FINISH:

瀚荃股份有限公司
CviLux Corporation

DRAWING NO.	CI0103SK	PART NO.	CI01**P1HK0
SCALE	4 / 1	SHEET	1 OF 1