FOR-1755 Rev.1.7

未注公差/General tolerances(mm)														
0 ~ 3	>3 ~ 6	>6 ~ 10	>10 ~ 18	>18 ~ 30	>30 ~ 50	>50 ~ 80	>80 ~ 120	>120 ~ 180	>180 ~ 250	>250 ~ 315	>315 ~ 400	>400 ~ 500	>500	0.1/10
±0.12	±0.18	±0.22	±0.26	±0.31	±0.37	±0.57	±0.80	±0.93	±1.05	±1.15	±1.60	±2.20	±2.50	±2°

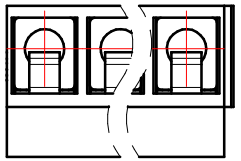

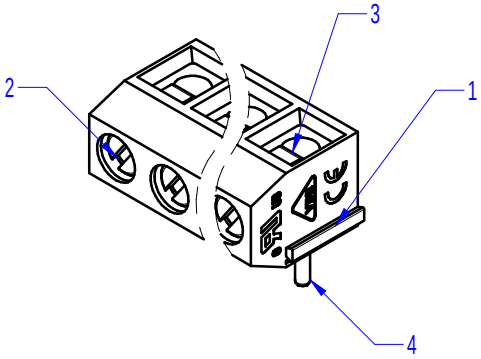

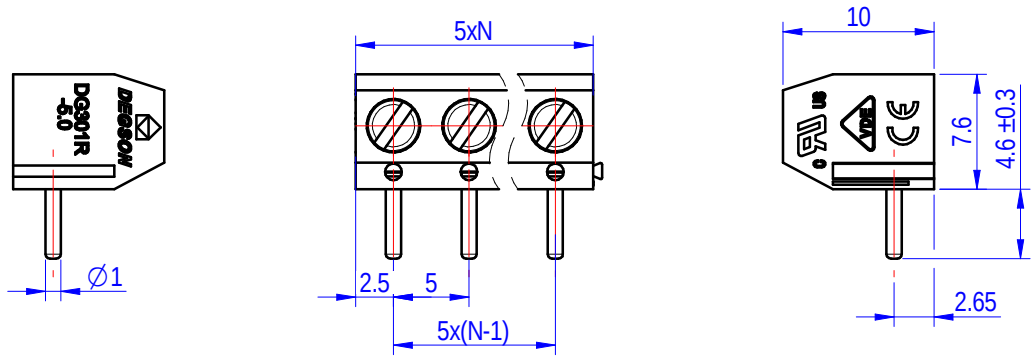

Note:
The A&Z(H) in the name means:A(H) and Z(H)

ITEM	NAME OF PART	MATERIAL	NOTES
4	Pin_header	Copper alloy	M2.5/Sn_plated
3	Spring	Stainless_steel	/
2	Screw	steel	M2.5/Zn_plated
1	Housing	PBT	UL94V-0

	B	C	D
UL 标准/UL Standard:			
额定电压/电流/Rated Voltage(V)/Current(A)	300/15	/	/
IEC 标准/IEC Standard:			
过压类别/Overvoltage Category/污染等级/Pollution Degree	III/3	III/2	II/2
额定电压/电流/Rated Voltage(V)/Current(A)	/	250/17.5	
工频耐压(V/1Min)/Withstanding voltage(V/1Min)	AC2000		
螺丝扭矩/Torque Tightening(N· m/Lb.in)	M2.5, 0.4/3.54		
线径范围(硬线和软线)/Wire Range(rigid and flexible)(AW	22~ 14 / 0.2~ 1.5		
间距/Pitch(mm)/线数范围/Poles	5.0/N= 02~ 22P		
剥线长度/Stripping length(mm)	5~ 6		
使用温度范围/Operating temperature(°C)	-30~ + 120		
符合RoHS环保要求/Conform to RoHS	Yes		

PCB LAYOUT

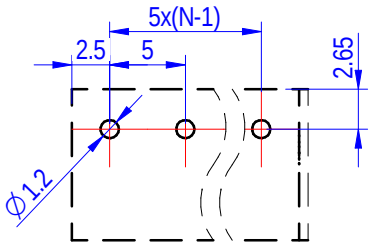

REV	ECN	DESCRIPTION	DRFT	DATE
01		技术参数应为工频耐压	曹心一	2022.12.08

DEGSON

APPD:	David	2022.12.08
CHKD:	David	2022.12.08
DRFT:	曹心一	2022.12.08

A4 mm (inch)

MATERIAL:
SURFACE/COLOR:
MAT NO./REV: / 00
MAT STATUS: 批量

NAME: DG301R-5.0-XXP-1Y-00A&Z(H)

DRAWING NO.	TYPE	DRAWING STATUS	SCALE	SHEET
200123750	CUSTOMER DRAWING	work	2:1	1/1

Transfer or duplication of this document as well as the utilization or communication of its contents are prohibited unless explicit authorization is granted. Violations will be liable for compensation. All rights reserved for patent, utility model or designs registrations. 除非给予明确授权，否则禁止转让、复制、利用、交流本文件的内容，侵犯者将负赔偿责任。本公司保留对涉及发明、实用新型和外观专利的所有权利。