FOR-1755 Rev.1.7

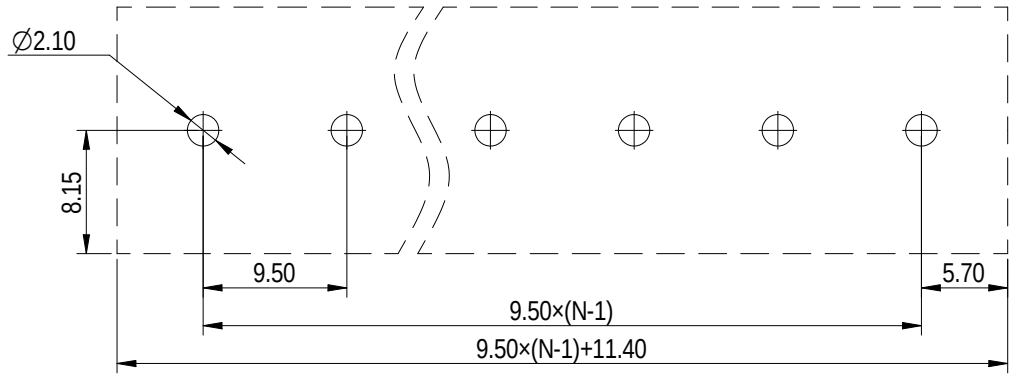

PCB LAYOUT

未注公差/General tolerances(mm)

0 ~ 3	>3 ~ 6	>6 ~ 10	>10 ~ 18	>18 ~ 30	>30 ~ 50	>50 ~ 80	>80 ~ 120	>120 ~ 180	>180 ~ 250	>250 ~ 315	>315 ~ 400	>400 ~ 500	>500	0.1/10
±0.12	±0.18	±0.22	±0.26	±0.31	±0.37	±0.57	±0.80	±0.93	±1.05	±1.15	±1.60	±2.20	±2.50	±2°

UL 标准/UL Standard:	B	C	D
额定电压/电流/Rated Voltage(V)/Current(A)	300/25	/	/
IEC 标准/IEC Standard:			
过压类别/Overvoltage Category/污染等级/Pollution Degree	III/3	III/2	II/2
额定电压/电流/Rated Voltage(V)/Current(A)	450/32	/	/
额定脉冲电压(KV)/Rate Impulse Voltage(KV)	4	/	/
螺丝扭矩/Torque Tightening(N· m/Lb.in)	M4, 1.2/12.24		
线径范围(硬线和软线)/Wire Range(rigid and flexible)(AWG/mm²)	22~12/0.5~4.0		
间距/Pitch(mm)/线数范围/Poles	9.50/N=02~24P		
使用温度范围/Operating temperature(°C)	-40~+105		
符合RoHS环保要求/Conform to RoHS	Yes		

ITEM	NAME OF PART	MATERIAL	NOTES
3	Screw	Steel	Ni Plated
2	Pin header	Copper alloy	Sn Plated
1	Housing	PA66	UL94V-0

Note:The A&Z(H) in the name means: A(H) and Z(H).

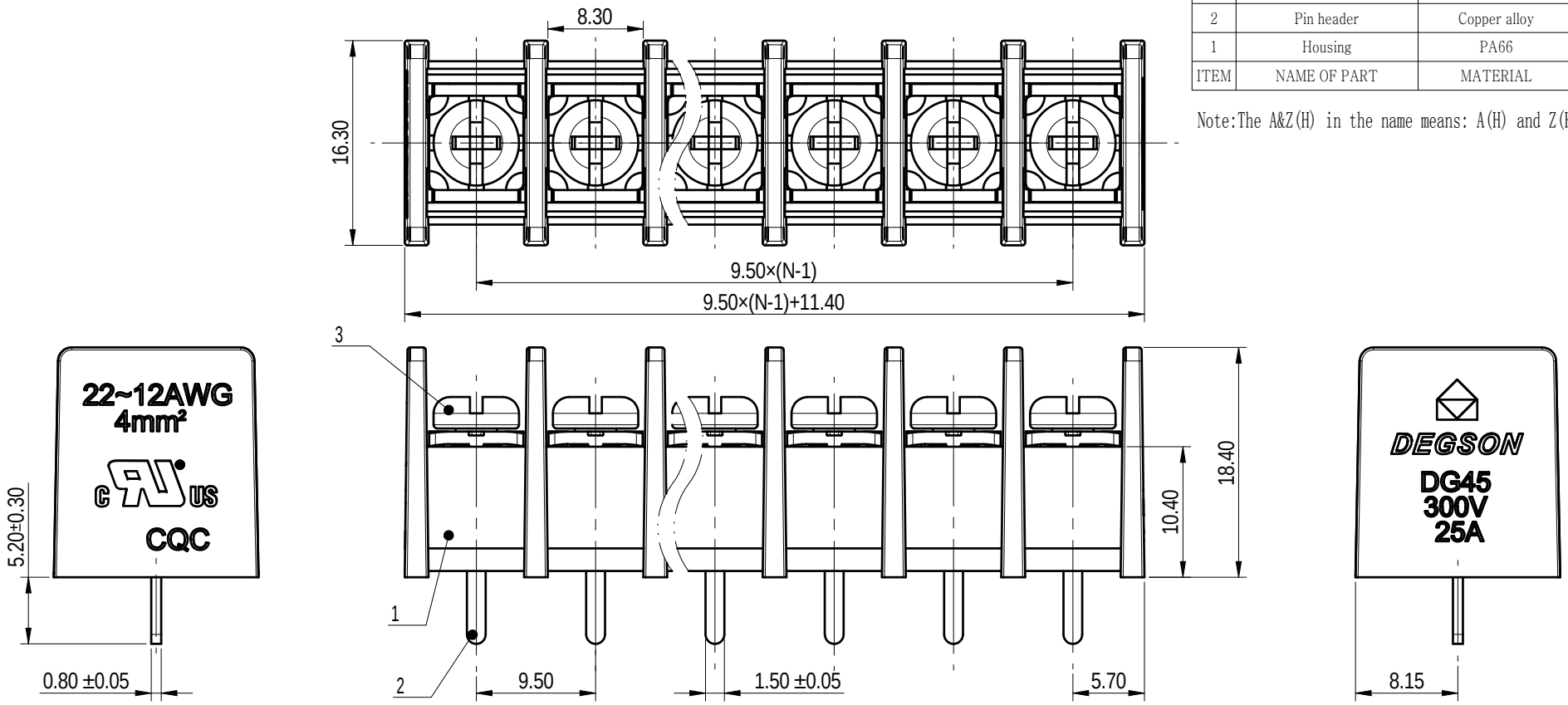

REV	ECN	DESCRIPTION	DRFT	DATE
01		修改线数范围	娄民洁	2023.05.23

DEGSON

APPD:	蓝贵凡	2023.05.23
CHKD:	曹利彬	2023.05.23
DRFT:	娄民洁	2023.05.23

A4 mm (inch)

MATERIAL:

SURFACE/COLOR:

MAT NO./REV: - / 00

MAT STATUS: 批量

NAME: DG45C-B-XXP-1Y-00A&Z(H)

DRAWING NO.	TYPE	DRAWING STATUS	SCALE	SHEET
200120284	CUSTOMER DRAWING	已发布	2:1	1/1

Transfer or duplication of this document as well as the utilization or communication of its contents are prohibited unless explicit authorization is granted. Violations will be liable for compensation. All rights reserved for patent, utility model or designs registrations. 除非给予明确授权，否则禁止转让、复制、利用、交流本文件的内容。侵犯者将负赔偿责任。本公司保留对涉及发明、实用新型和外观专利的所有权利。