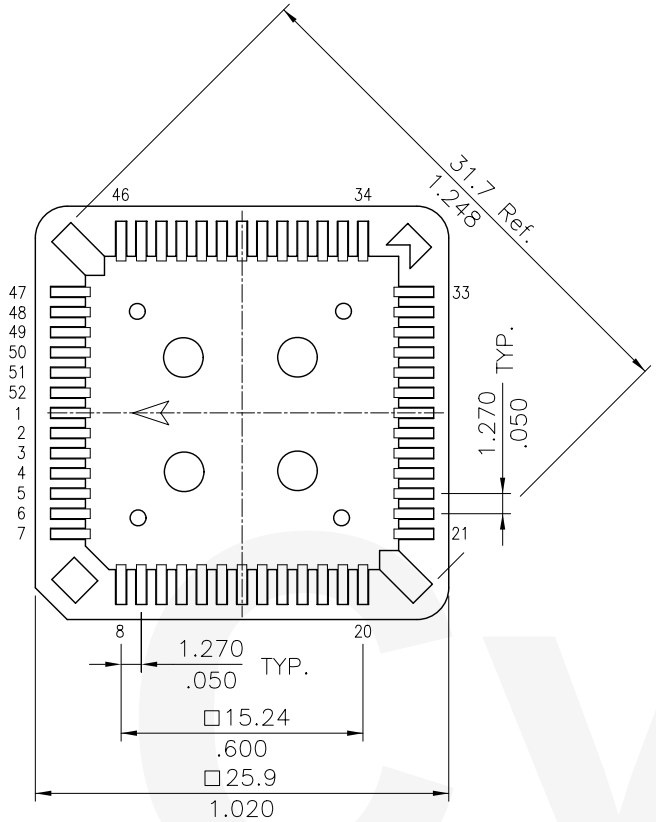

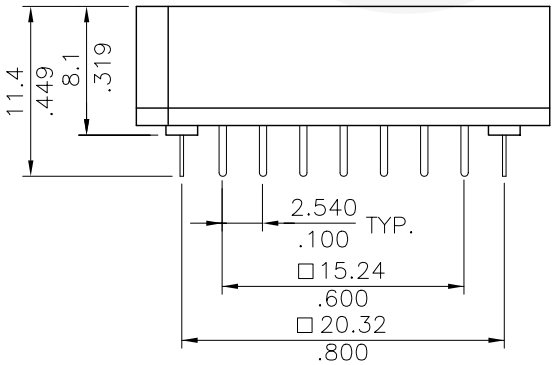

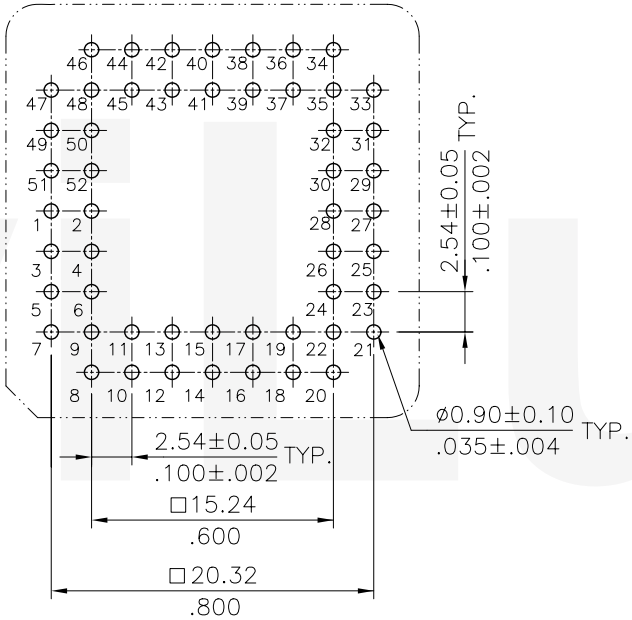

Recommended P.C. Board Layout

Material:

* Insulation:
  P/N: CS215211000 (PBT UL 94V-0)
  P/N: CS215210A00 (PPS UL 94V-0)
* Contact: Phosphor Bronze

Ordering Code

CS21	52	1	1	000
①	②	③	④	⑤

① Series No.
② Circuits:
③ Plating Code :
1= 2.54μm(100μ") Min. Tin over 0.76μm(30μ") Nickel
④ Color : 1= Black(PBT)
0= Nature(PPS)
⑤ Option : 000= PBT(Standard)
A00= PPS

RoHS Compliant

SYM	NAME	DATE	REVISIONS
4			
3			
2			
1	SUN	9/23/04'	ECN04229

CVILUX CORP.
2004.10.05
ISSUED

		DATE
DRAWN BY:	Sun	9/23/04'
ENGINEER:	Eisley	9/23/04'
CHECKED BY:	David	9/30/04'
APPROVED BY:	Alex	9/30/04'

UNIT: mm / inch

TOLERANCE UNLESS OTHERWISE SPECIFIED

.X ± 0.25/.010	X.° ± 1°
.XX ± 0.15/.006	.X° ±
.XXX ± 0.08/.003	.XX° ±

TITLE: 1.27MM(.050") BOARD MOUNT CHIP CARRIER SOCKET

MATERIAL:

FINISH:

瀚荃股份有限公司
CviLux Corporation

DRAWING NO.	CS2107SF	PART NO.	CS21521**00
SCALE	2 / 1	SHEET	1 OF 1