Transfer or duplication of this document as well as the utilization or communication of its contents are prohibited unless explicit authorization is granted. Violations will be liable for compensation. All rights reserved for patent, utility model or designs registrations. 除非另行明确授权，否则禁止转让、复制、利用、交流本文件的内容，侵犯者将负赔偿责任。本公司保留对涉及发明、实用新型和外观专利的所有权利。

未注公差/General tolerances(mm)														
0~3	>3~6	>6~10	>10~18	>18~30	>30~50	>50~80	>80~120	>120~180	>180~250	>250~315	>315~400	>400~500	>500	0.1/10
±0.12	±0.18	±0.22	±0.26	±0.31	±0.37	±0.57	±0.80	±0.93	±1.05	±1.15	±1.60	±2.20	±2.50	±2°

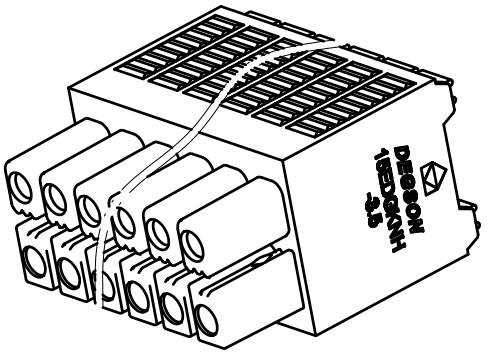

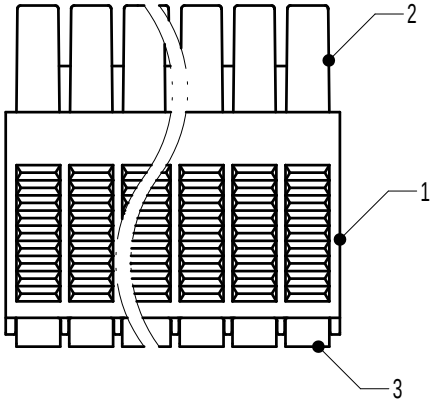

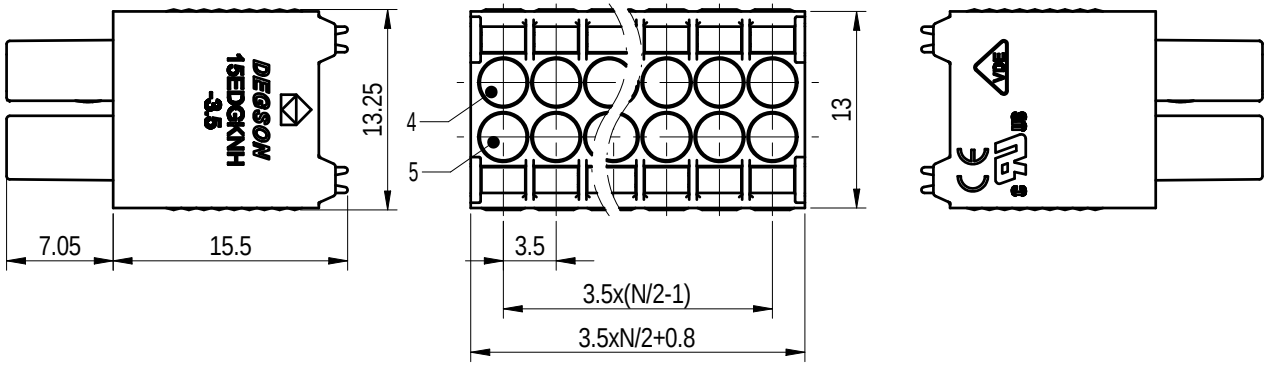

Note:
The A&Z(H) in the name means: A(H) and Z(H).

ITEM	NAME OF PART	MATERIAL	NOTES
5	Spring	Stainless steel	/
4	Clamp	Copper alloy	Sn Plated
3	Button	POM	UL94HB
2	Cover	PA66	UL94V-0
1	Housing	PA66	UL94V-0

UL 标准/UL Standard:	B	C	D
额定电压/电流/Rated Voltage(V)/Current(A)	300/8	50/8	/
IEC 标准/IEC Standard:			
过压类别/Overvoltage Category/污染等级/Pollution Degree	III/3	III/2	II/2
额定电压/电流/Rated Voltage(V)/Current(A)	200/9.5	250/9.5	320/9.5
额定脉冲电压(KV)/Rate Impulse Voltage(KV)	2.5	2.5	2.5
螺丝扭矩/Torque Tightening(N·m/Lb.in)	/		
线径范围(硬线和软线)/Wire Range(rigid and flexible)(AWG/mm²)	26~16 / 0.2~1.5		
间距/Pitch(mm)/线数范围/Poles	3.5/N=04~48P		
剥线长度/Stripping length(mm)	10		
使用温度范围/Operating temperature(°C)	-40~+105		
符合RoHS环保要求/Conform to RoHS	Yes		
标准颜色编号/Standard color number: PANTONE / RAL	/		

REV	ECN	DESCRIPTION	DRFT	DATE
00			胡松	2022.08.15

DEGSON

APPD:	兰春华	2022.08.16
CHKD:	龚耀志	2022.08.16
DRFT:	胡松	2022.08.15

A4 mm (inch)

MATERIAL: SURFACE/COLOR:

MAT NO./REV: - / 00 MAT STATUS: 批量

NAME: 15EDGKNH-3.5-XXP-1Y-00A&Z(H)

DRAWING NO.	TYPE	DRAWING STATUS	SCALE	SHEET
200098349	CUSTOMER DRAWING	已发布	2:1	1/1