未注公差/General tolerances(mm)														0.1/10
0 ~ 3	>3 ~ 6	>6 ~ 10	>10 ~ 18	>18 ~ 30	>30 ~ 50	>50 ~ 80	>80 ~ 120	>120 ~ 180	>180 ~ 250	>250 ~ 315	>315 ~ 400	>400 ~ 500	>500	∠ ±2°
±0.12	±0.18	±0.22	±0.26	±0.31	±0.37	±0.57	±0.80	±0.93	±1.05	±1.15	±1.60	±2.20	±2.50	

使用温度范围/Operating temperature(°C)	−40~+105
符合RoHS环保要求/Conform to RoHS	Yes

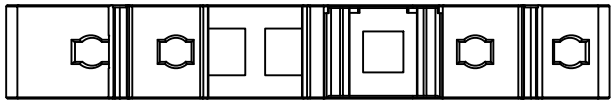

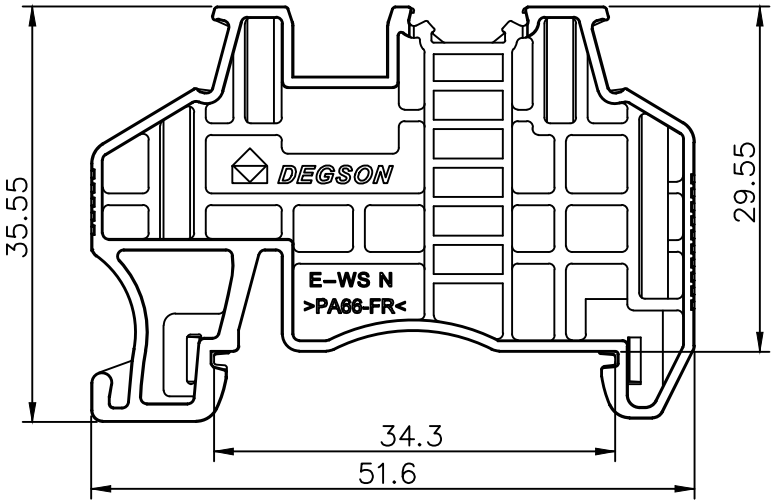

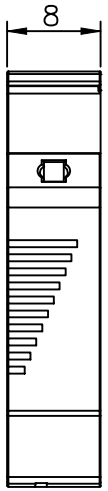

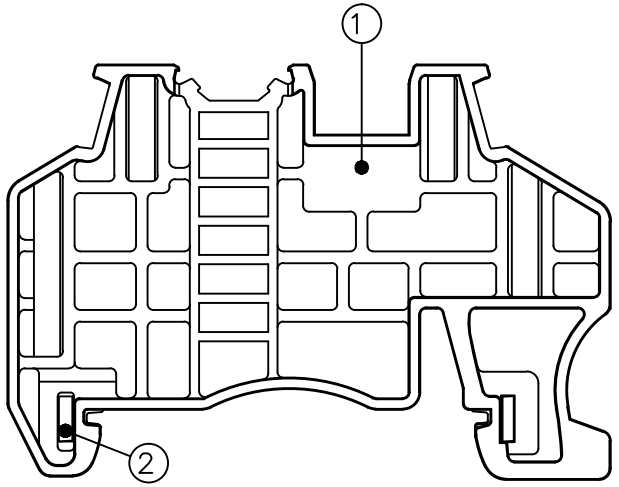

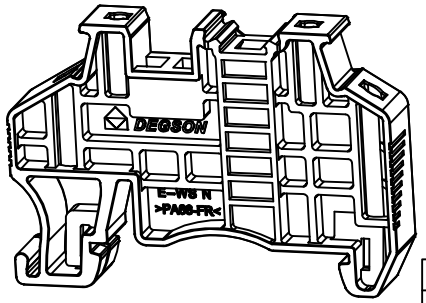

ITEM	NAME OF PART	MATERIAL	NOTES
2	Stator	Stainless steel	/
1	Housing	PA66	UL94V-0

00	/	/	Liu Y	2022.06.15	DRFT:	Liu Y	2022.06.15	DRAWING NO. /	TYPE CUSTOMER DRAWING	DRAWING STATUS /	SCALE 1.5:1	SHEET 1/1
REV	ECN	DESCRIPTION	DRFT	DATE	APPD:	Li GL	2022.06.15					
					CHKD:	Ma EK	2022.06.15					

DEGSON

MATERIAL:/ SURFACE/COLOR:/

MAT NO./REV:/ MAT STATUS:/

NAME E-WS N-01P-1Y-00A(H)

A4

This is an original as well as the intellectual property of DEGSON and cannot be copied or distributed without permission. All rights reserved to patent, utility model, designs, etc. 未经许可，不得复制、传播、使用本文件的全部或部分内容。版权所有，侵权必究。