Transfer or duplication of this document as well as the utilization or communication of its contents are prohibited unless explicit authorization is granted. Violations will be liable for compensation. All rights reserved for patent, utility model or designs registrations. 非给予明确授权、否则禁止转让、复制、利用、交流本文件的内容。侵犯者将负赔偿责任。本公司保留对涉及发明、实用新型和外观专利的所有权利。

未注公差/General tolerances(mm)

0 ~ 3	>3 ~ 6	>6 ~ 10	>10 ~ 18	>18 ~ 30	>30 ~ 50	>50 ~ 80	>80 ~ 120	>120 ~ 180	>180 ~ 250	>250 ~ 315	>315 ~ 400	>400 ~ 500	>500
±0.12	±0.18	±0.22	±0.26	±0.31	±0.37	±0.57	±0.80	±0.93	±1.05	±1.15	±1.60	±2.20	±2.50

0.1/10

±2°

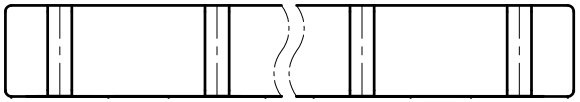

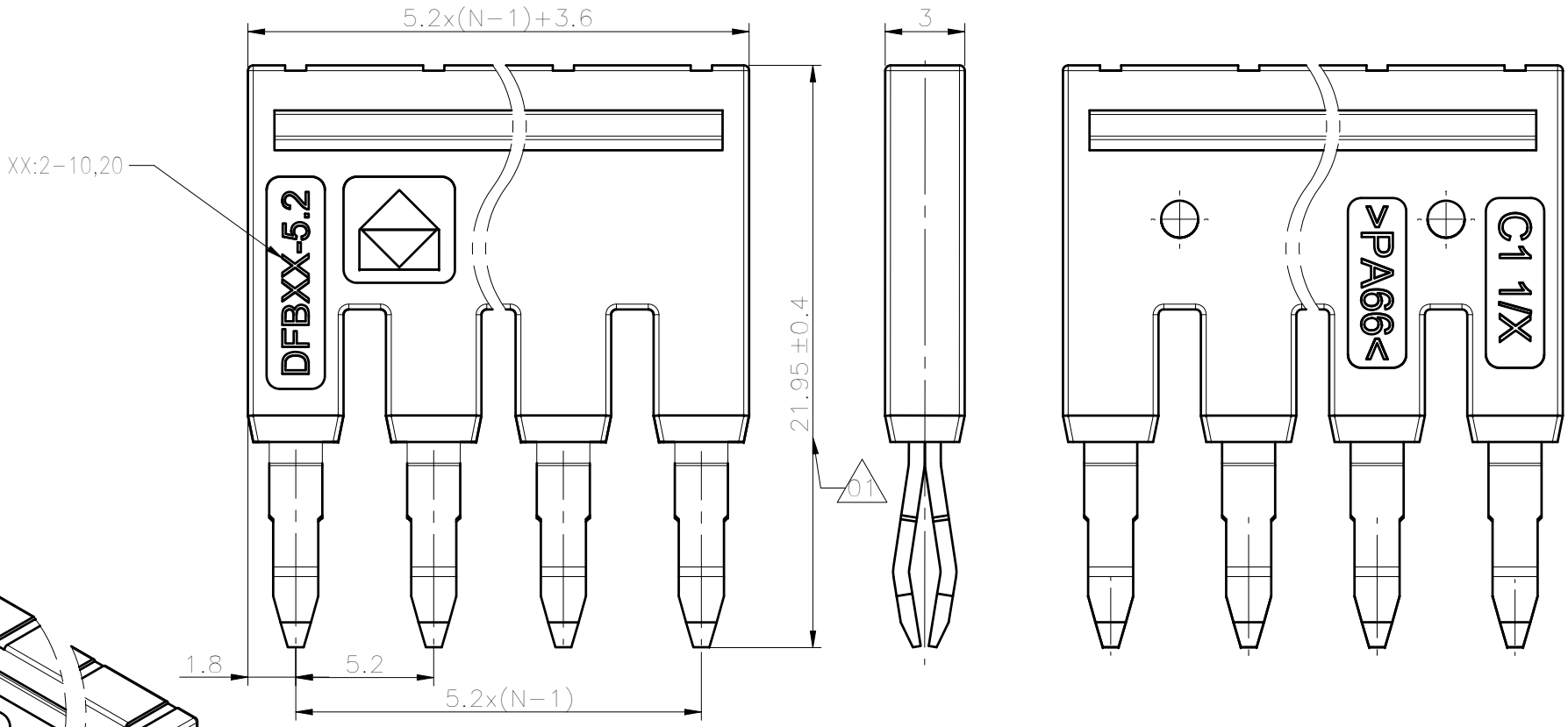

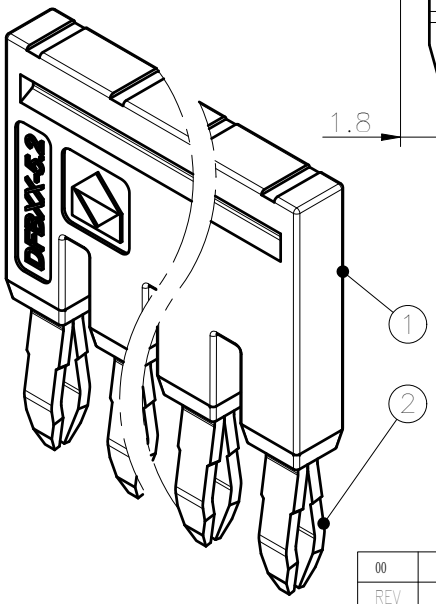

ITEM	NAME OF PART	MATERIAL	NOTES
2	Current_carrier	Copper	Sn_Plated
1	Housing	PA66	UL94V_0

间距/Pitch(mm)/线数范围/Poles	5.2/N=2~10P,20P
使用温度范围/Operating temperature(℃)	-40~+105
符合RoHS环保要求/Conform to RoHS	Yes

DEGSON

APPD:	Peng M	2022.06.15
CHKD:	Gao WG	2022.06.15
DRFT:	Huang RJ	2022.06.15

A4 (mm/inch)

MATERIAL: / SURFACE: /

MAT NO./REV: / / MAT STATUS: /

NAME: DFBXX-5.2-1Y-00A(H)

DRAWING NO.	TYPE	DRAWING STATUS	SCALE	SHEET
/	CUSTOMER DRAWING	/	4:1	1/1

REV	ECN	DESCRIPTION	DRFT	DATE
00	/	/	Huang RJ	2022.06.15