Transfer or duplication of this document as well as the utilization or communication of its contents are prohibited unless explicit authorization is granted. Violations will be liable for compensation. All rights reserved for patent, utility model or design registration. 未经书面授权，不得复制、传播、使用此文件及其内容，侵权者将负赔偿责任。版权所有，保留一切专利、实用新型或外观设计权利。

未注公差/General tolerances(mm)

0~3	>3~6	>6~10	>10~18	>18~30	>30~50	>50~80	>80~120	>120~180	>180~250	>250~315	>315~400	>400~500	>500	0.1/10
±0.12	±0.18	±0.22	±0.26	±0.31	±0.37	±0.57	±0.80	±0.93	±1.05	±1.15	±1.60	±2.20	±2.50	±2°

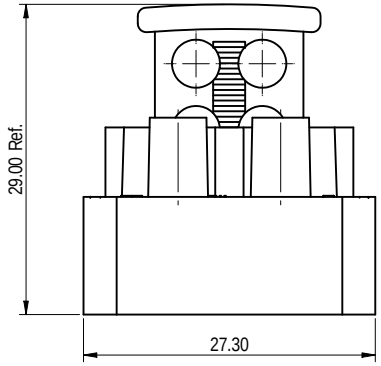

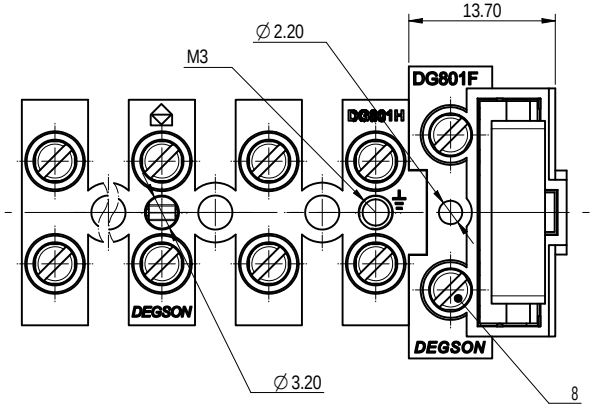

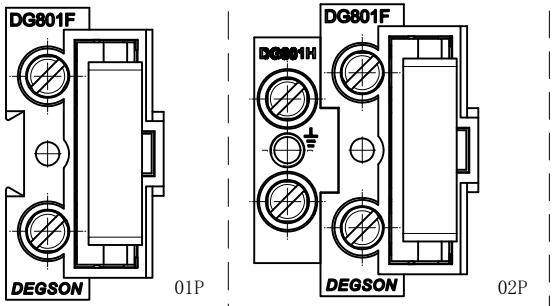

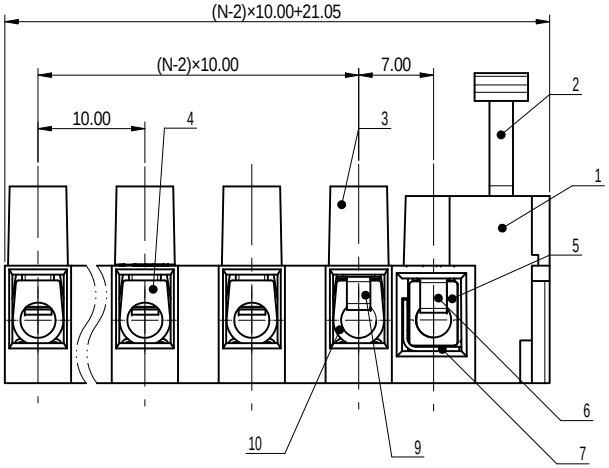

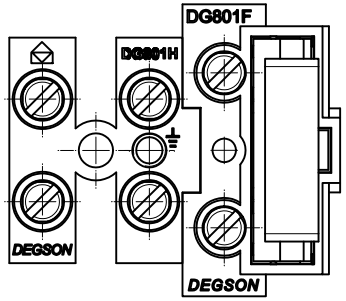

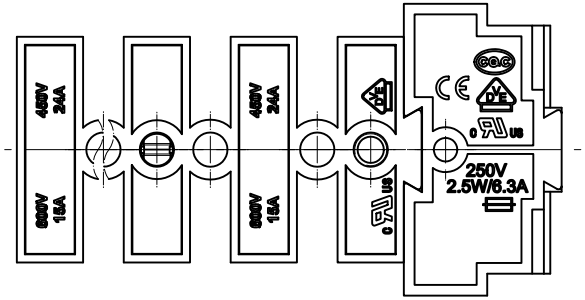

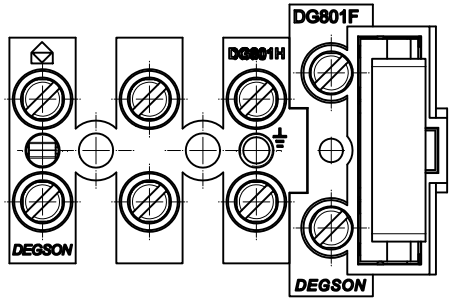

Note: The A&Z(H) in the name means: A(H) and Z(H).

ITEM	NAME OF PART	MATERIAL	NOTES
10	Cage2	Copper alloy	Ni Plated
9	Spring2	Stainless steel	/
8	Screw	Steel	Zn Plated
7	Clamp	Copper alloy	Ni Plated
6	Spring1	Stainless steel	/
5	Cage1	Copper alloy	Ni Plated
4	Current carrier	Steel+Copper alloy	Ni Plated
3	Housing3	PA66	UL94V-0
2	Housing2	PA66	UL94V-0
1	Housing1	PA66	UL94V-0

UL 标准/UL Standard:	B	C	D
额定电压/电流/Rated Voltage(V)/Current(A)(DG801F)	300/6.3	/	300/10
UL 标准/UL Standard:	B	C	D
额定电压/电流/Rated Voltage(V)/Current(A)(DG801H)	600/15	/	600/5
IEC 标准/IEC Standard:			
过压类别/Overvoltage Category/污染等级/Pollution Degree	III/3	III/2	II/2
额定电压/电流/Rated Voltage(V)/Current(A)(DG801F)	250/6.3	/	/
IEC 标准/IEC Standard:			
过压类别/Overvoltage Category/污染等级/Pollution Degree	III/3	III/2	II/2
额定电压/电流/Rated Voltage(V)/Current(A)(DG801H)	450/24	/	/
螺丝扭矩/Torque Tightening(N·m/Lb.in)	M3, 0.5/4.43		
线径范围(硬线和软线)/Wire Range(rigid and flexible)(AWG/mm²)	22~14 / 0.5~2.5		
间距/Pitch(mm)/线数范围/Poles	10.00/N=01~05P		
剥线长度/Stripping length(mm)	6~7		
使用温度范围/Operating temperature(℃)	-40~+105		
符合RoHS环保要求/Conform to RoHS	Yes		

REV	ECN	DESCRIPTION	DRFT	DATE
02			委民洁	2023.05.25

DEGSON

APPD:	宣贵凡	2023.05.25
CHKD:	曹利彬	2023.05.25
DRFT:	委民洁	2023.05.25

A3 | UNIT: mm

MATERIAL: | SURFACE/COLOR:

MAT NO./REV: - / 00 | MAT STATUS: 批量

NAME: DG801-XXP-1Y-00A&Z(H)

DRAWING NO.	TYPE	DRAWING STATUS	SCALE	SHEET
200043121	CUSTOMER DRAWING	已发布	1:1	1/1