FOR-1759 Rev.1.7

未注公差/General tolerances(mm)														
0 ~ 3	>3 ~ 6	>6 ~ 10	>10 ~ 18	>18 ~ 30	>30 ~ 50	>50 ~ 80	>80 ~ 120	>120 ~ 180	>180 ~ 250	>250 ~ 315	>315 ~ 400	>400 ~ 500	>500	0.1/10
±0.12	±0.18	±0.22	±0.26	±0.31	±0.37	±0.57	±0.80	±0.93	±1.05	±1.15	±1.60	±2.20	±2.50	±2°

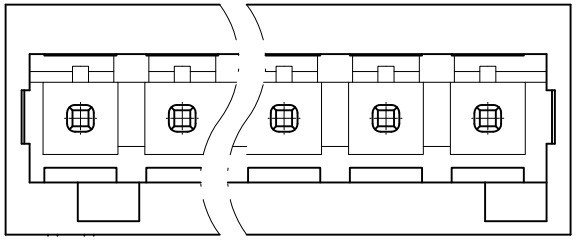

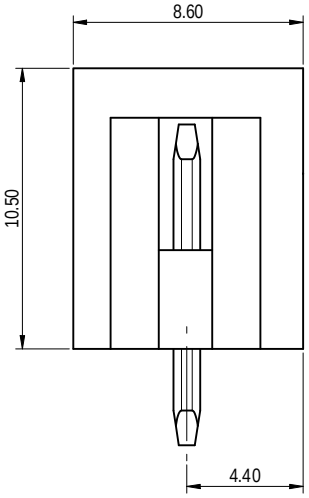

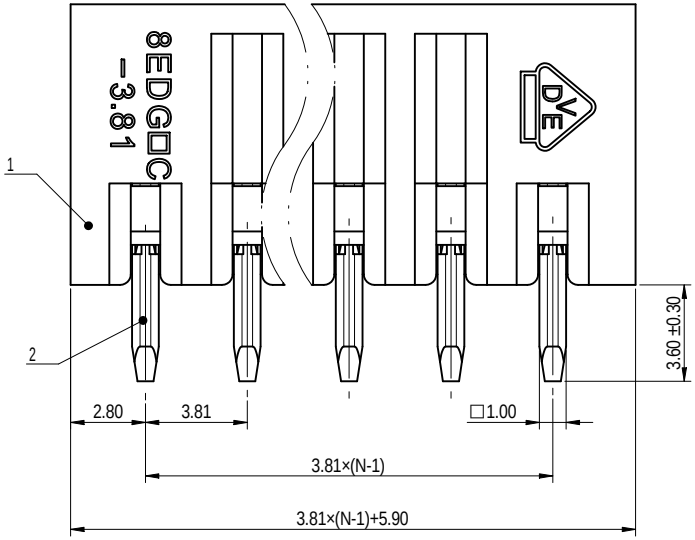

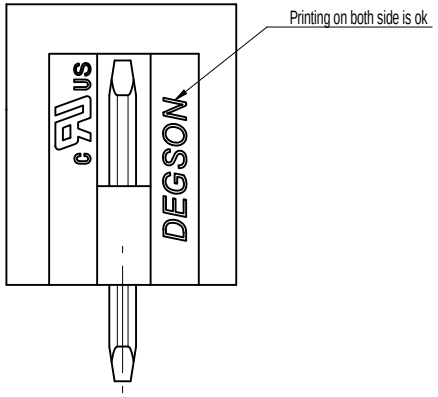

PCB LAYOUT

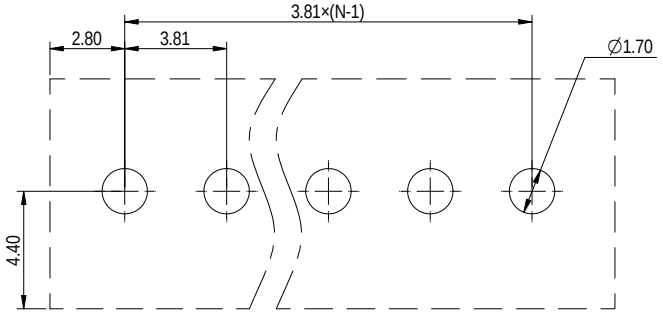

Note:The A&Z(H) in the name means: A(H) and Z(H).

ITEM	NAME OF PART	MATERIAL	NOTES
2	Pin header	Copper alloy	Sn Plated
1	Housing	PA66	UL94V-0

UL 标准/UL Standard:	B	C	D
额定电压/电流/Rated Voltage(V)/Current(A)	300/10	/	/
IEC 标准/IEC Standard:			
过压类别/Overvoltage Category/污染等级/Pollution Degree	III/3	III/2	II/2
额定电压/电流/Rated Voltage(V)/Current(A)	130/10	/	/
额定脉冲电压(KV)/Rate Impulse Voltage(KV)	2.5	/	/
间距/Pitch(mm)/线数范围/Poles	3.81/N=02~24P		
使用温度范围/Operating temperature(°C)	-40~+105		
符合RoHS环保要求/Conform to RoHS	Yes		

REV	ECN	DESCRIPTION	DRFT	DATE
00			委民洁	2022.12.27

DEGSON

APPD:	蓝贵凡	2023.01.06
CHKD:	曹利彬	2023.01.04
DRFT:	委民洁	2022.12.27

A3 mm (inch)

MATERIAL:
SURFACE/COLOR: PANTONCE 428C
MAT NO./REV: - / 00
MAT STATUS: 批量

NAME: 8EDGVC-3.81-XXP-11-01A&Z(H)

DRAWING NO.	TYPE	DRAWING STATUS	SCALE	SHEET
200126540	CUSTOMER DRAWING	已发布	1:1	1/1

Transfer or duplication of this document as well as the utilization or communication of its contents are prohibited unless explicit authorization is granted. Violations will be liable for compensation. All rights reserved for patent, utility model or designs registrations. 除非给予明确授权，否则禁止转让、复制、利用、交流本文件的内容，侵犯者将负赔偿责任。本公司保留对涉及发明、实用新型和外观专利的所有权利。