FOR-1755 Rev.1.7

PCB LAYOUT

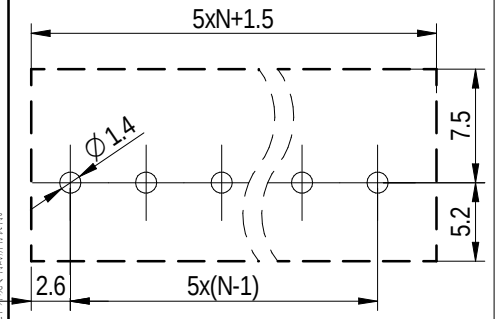

未注公差/General tolerances(mm)														
0 ~ 3	>3 ~ 6	>6 ~ 10	>10 ~ 18	>18 ~ 30	>30 ~ 50	>50 ~ 80	>80 ~ 120	>120 ~ 180	>180 ~ 250	>250 ~ 315	>315 ~ 400	>400 ~ 500	>500	0.1/10
±0.12	±0.18	±0.22	±0.26	±0.31	±0.37	±0.57	±0.80	±0.93	±1.05	±1.15	±1.60	±2.20	±2.50	±2°

UL 标准/UL Standard:	B	C	D
额定电压/电流/Rated Voltage(V)/Current(A)	300/15	/	300/10
IEC 标准/IEC Standard:			
过压类别/Overvoltage Category/污染等级/Pollution Degree	III/3	III/2	II/2
额定电压/电流/Rated Voltage(V)/Current(A)	320/20	400/20	630/20
额定脉冲电压(KV)/Rate Impulse Voltage(KV)	4	4	4
线径范围(硬线和软线)/Wire Range(rigid and flexible)(AW	18～14 / 0.75～2.5		
间距/Pitch(mm)/线数范围/Poles	5/N=02～12P		
剥线长度/Stripping length(mm)	9～10		
使用温度范围/Operating temperature(°C)	-40～+110		
符合RoHS环保要求/Conform to RoHS	Yes		
标准颜色编号/Standard color number: PANTONE / RAL	Green		

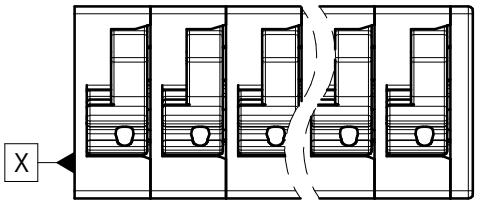

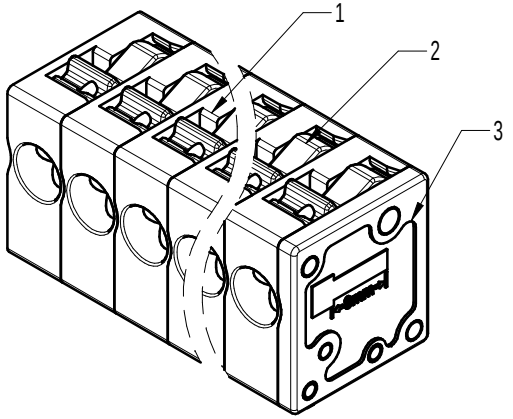

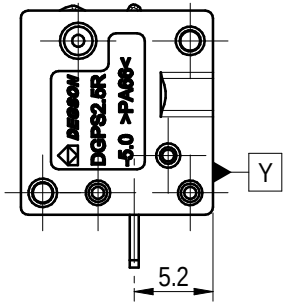

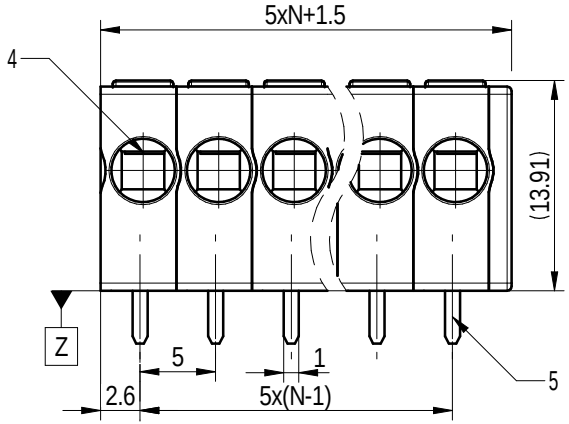

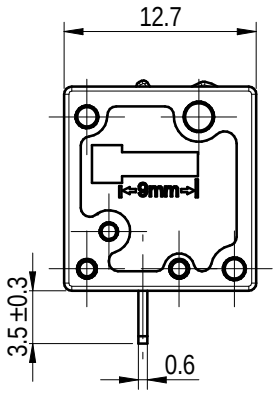

ITEM	NAME OF PART	MATERIAL	NOTES
5	Pin_header	Copper	Sn_plated
4	Spring	Stainless Steel	/
3	Cover	Nylon	UL94V-0
2	Button	PPS	UL94V-0
1	Housing	Nylon	UL94V-0

REV	ECN	DESCRIPTION	DRFT	DATE
00			曹心一	2023.02.09

DEGSON

APPD:	David	2023.02.09
CHKD:	David	2023.02.09
DRFT:	曹心一	2023.02.09

A4 mm (inch)

MATERIAL: SURFACE/COLOR:

MAT NO./REV: / 00 MAT STATUS:

NAME: DGPS2.5R-5.0-XXP-1Y-00Z(H)

DRAWING NO.	TYPE	DRAWING STATUS	SCALE	SHEET
200123562	CUSTOMER DRAWING	已发布	2:1	1/1

Transfer or duplication of this document as well as the utilization or communication of its contents are prohibited unless explicit authorization is granted. Violations will be liable for compensation. All rights reserved for patent, utility model or designs registrations. 除非给予明确授权，否则禁止转让、复制、利用、交流本文件的内容，侵犯者将负赔偿责任。本公司保留对涉及发明、实用新型和外观专利的所有权利。