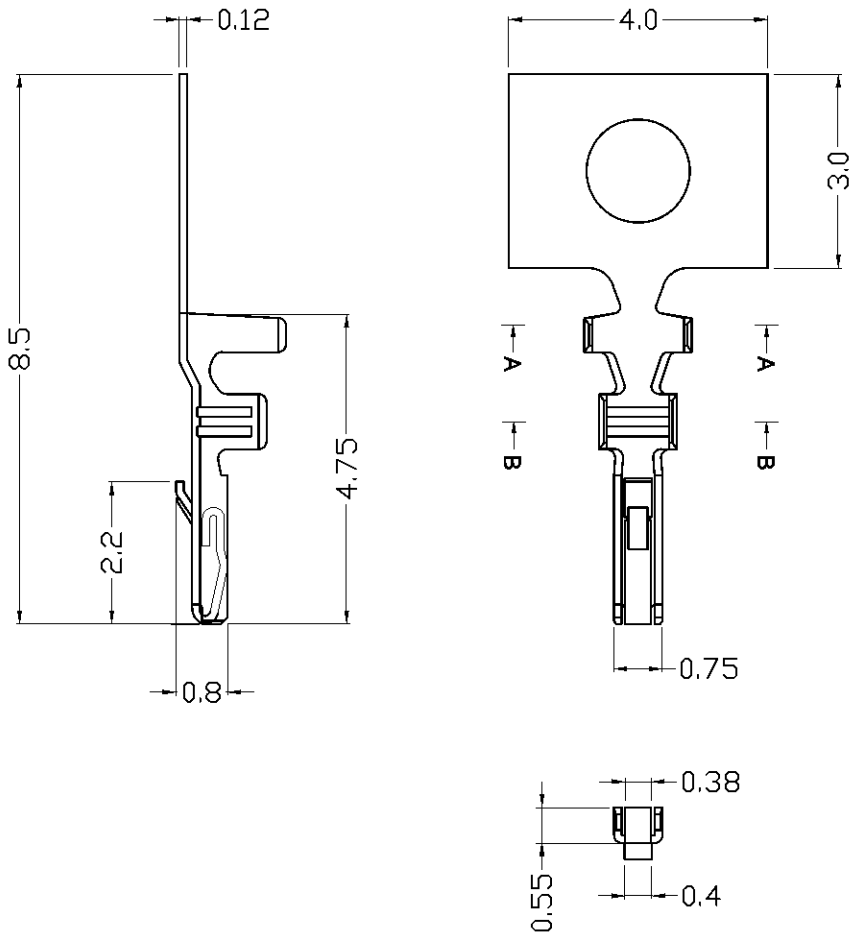

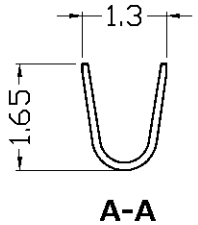

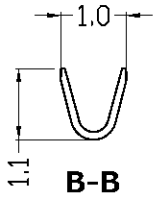

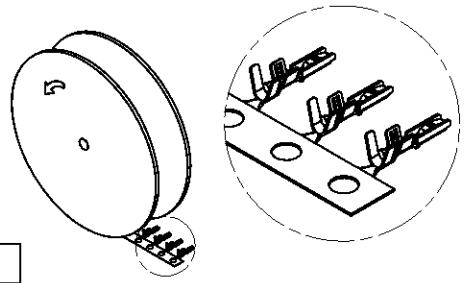

Part No.	Wire Range	Material	Finish	Q'ty/Reel
T1259-TP	#26-#30	Phosphor Bronze	Tin Plated	13,000
T1259-GP	#26-#30	Phosphor Bronze	Gold Plated	13,000

		PART NO.	T1259-XP		DRAWN	Andrew			
		DRAWING NO.	T1259-XP		CHECKED	Claudia			
		DATE	2015/10/28		APPROVED	Brian	1	Drawing updated	2022/3/10
TITLE: Pitch 1.25mm Terminal	REV. A0	TOLERANCE	.X ±0.25 .XX ±0.20	SCALE 1:1	UNIT	mm	NO.	DESCRIPTION	DATE