Page1:MCU.SchDoc

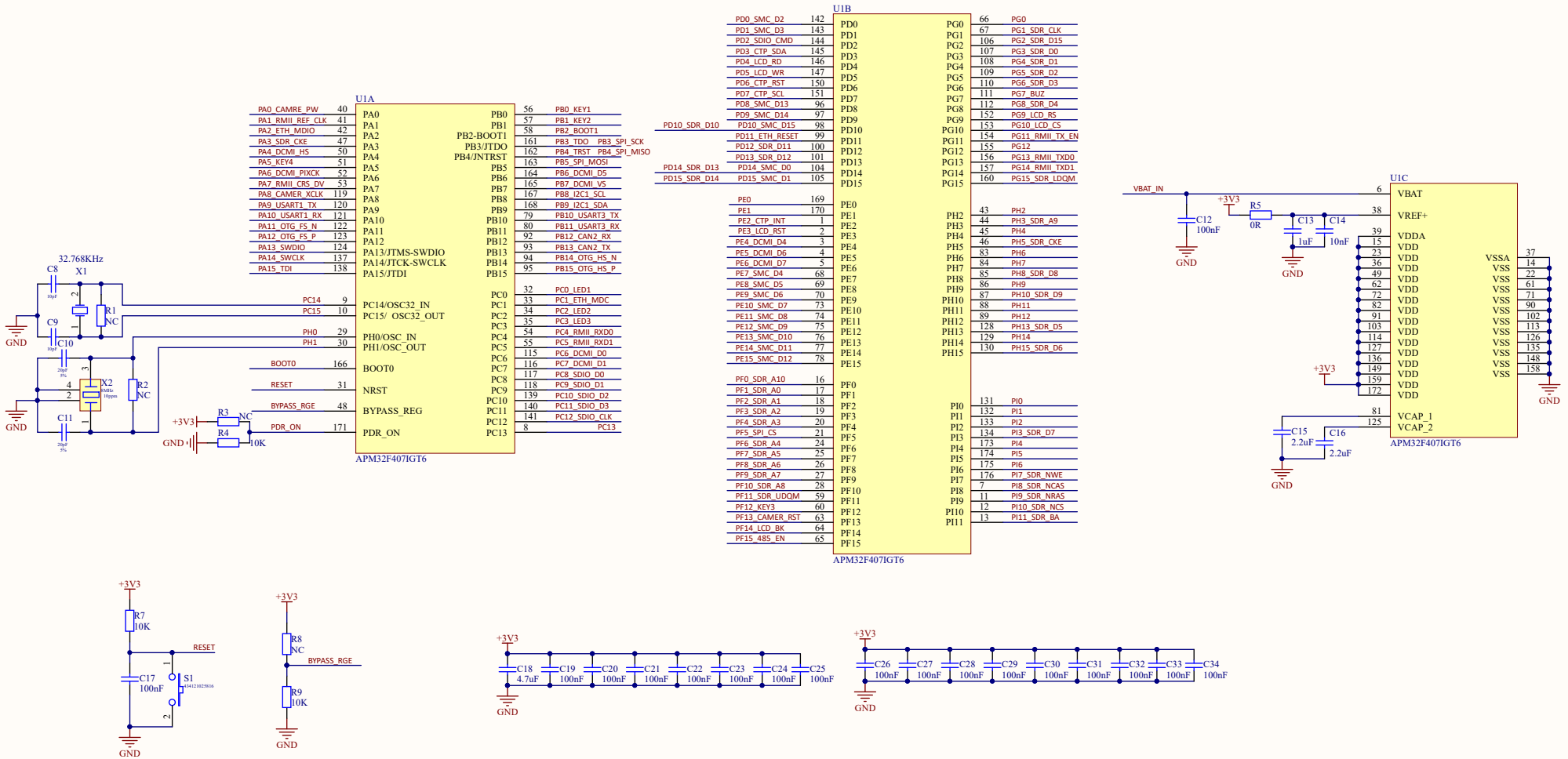

Geehy SEMICONDUCTOR www.geehy.com	ProjectName	APM32F407IG Core V1
	DocumentName	MCU
	Page Number	1/2

Page2:Connect.SchDoc

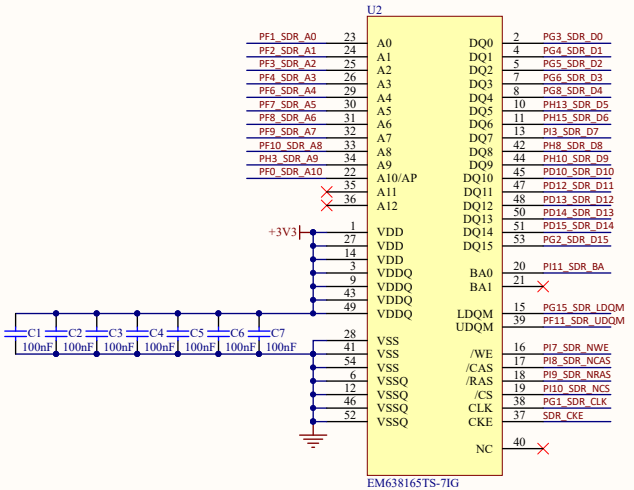

SDRAM

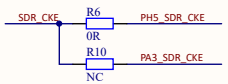

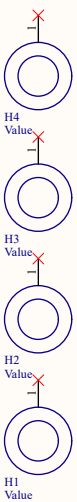

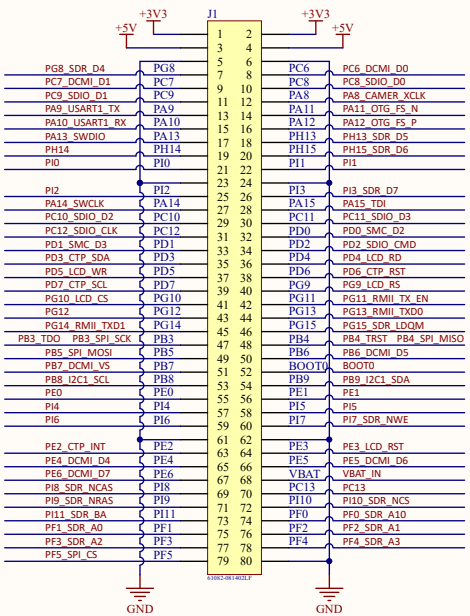

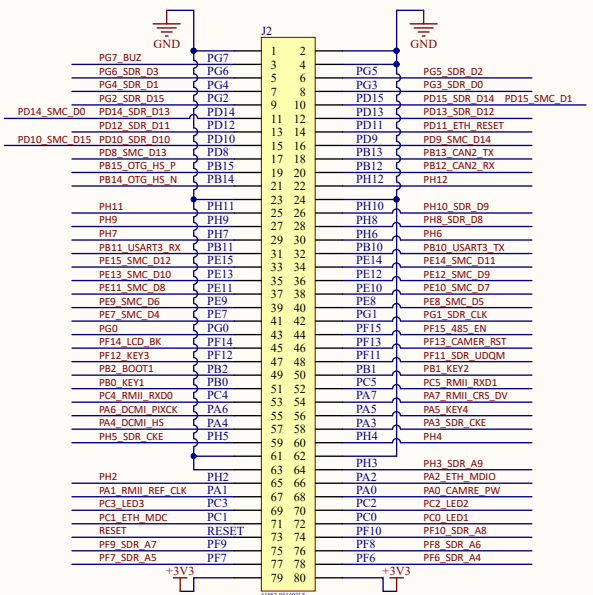

CONNECT

Geehy SEMICONDUCTOR www.geehy.com	ProjectName	APM32F407IG Core V1
	DocumentName	Connect
	Page Number	2/2