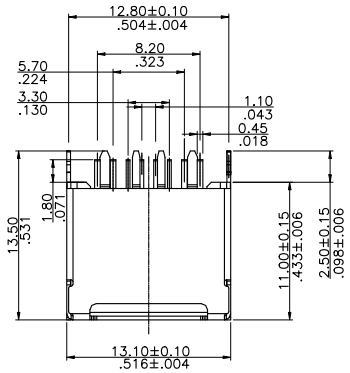

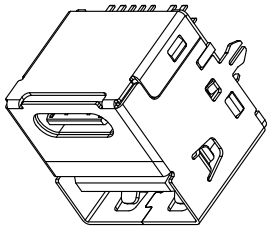

MATERIAL:

1.HOUSING: HIGH TEMPERATURE PLASTIC , BK
2.TYPE-C CONTACT: COPPER ALLOY
3.USB CONTACT: COPPER ALLOY
4.SHELL: COLD ROLLED STEEL
5.MID PLATE: STAINLESS STEEL
6.TYPE-C MID PLATE: STAINLESS STEEL
7.TYPE-C MODING: HIGH TEMPERATURE PLASTIC , BK

FINISH:

CONTACT: SEE ORDER INFORMATION
SHELL: NICKEL PLATING

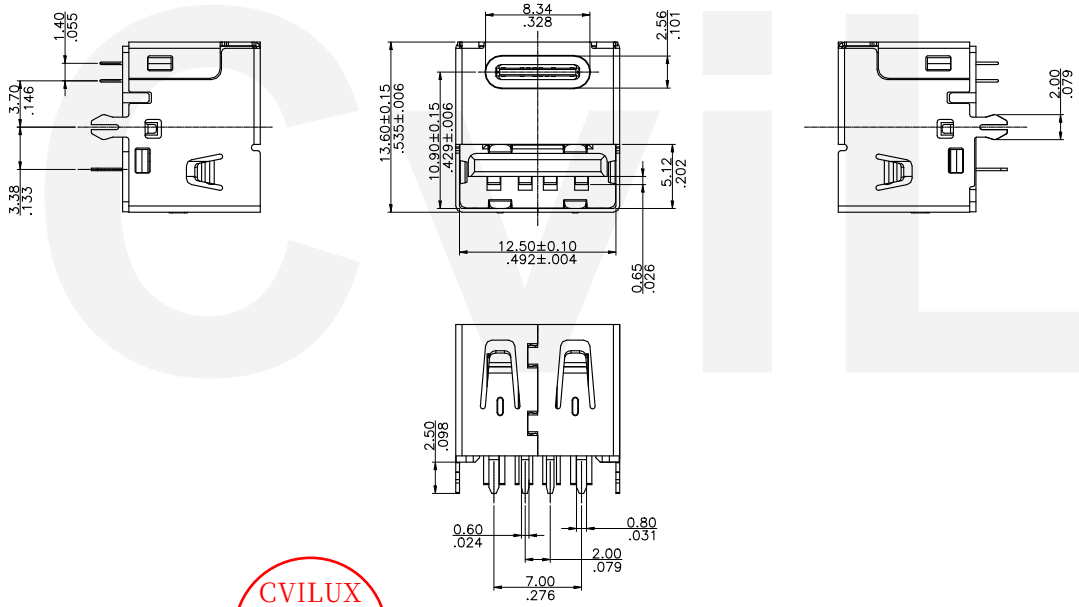

Ordering Code:

CU36 14 S * D C L A 002 -LF
① ② ③ ④ ⑤ ⑥ ⑦ ⑧ ⑨

① Series No:CU36
② No. of Circuits: 14Pin
③ Contact Type: S= Socket
④ Plating Option:
A= Gold Flash plated on Contact area,
Matte Tin plated on Soldertails,
Nickel underplating over all
⑤ Shell Material & Plating:
D= Cold Rolled Steel Ni Plated
⑥ Contact Material: C= Copper Alloy
⑦ Insulator Material & Color Option:
L= High Temperature Plastic
⑧ Packing: A= Tray
⑨ -LF= For Lead Free IR Reflow Process

Lead Free Process | RoHS Compliant

CVILUX
2023.04.27
ISSUED

SYM	NAME	DATE	REVISIONS
4			
3			
2			
1	Ash	2023.3.31	ECRD123017 REVISIONS

DRAWN BY:	Ash	03/09-23'	
ENGINEER:	Ash	03/09-23'	
CHECKED BY:	Keny	03/09-23'	
APPROVED BY:	Keny	03/09-23'	

UNIT: mm / inch

TOLERANCE UNLESS OTHERWISE SPECIFIED

.X ± 0.30/.012	X.° ± 2°
.XX ± 0.20/.008	.X° ± 1°
.XXX ± 0.10/.004	.XX° ± 0.5°

TITLE: Type C/F 14pin and USB 2.0 female single One side plug-in two in one

MATERIAL:

FINISH:

瀚荃股份有限公司
CviLux Corporation

DRAWING NO.	CU36S02SB	PART NO.	CU3614S*DCLA002-LF
SCALE	1 / 1	SHEET	1 OF 3

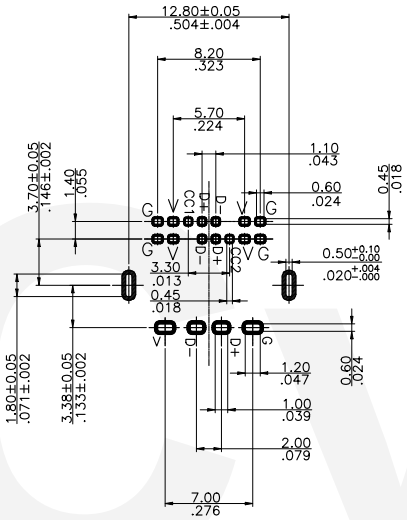

Recommended P.C.B Layout

Tolerance:±0.05

USB TYPE-C FULL-FEATURED RECEPTACLE INTERFACE PIN ASSIGNMENTS

PIN	Signal Name	Description	PIN	Signal Name	Description
A1	GND	Ground return	B12	GND	Ground return
A2			B11		
A3			B10		
A4	VBUS	Bus Power	B9	VBUS	Bus Power
A5	CC1	Configuration Channel	B8		
A6	Dp1	Positive half of the USB 2.0 differential pair—Position 1	B7		
A7	Dn1	Negative half of the USB 2.0 differential pair—Position 1	B6		
A8			B5	CC2	Configuration Channel
A9	VBUS	Bus Power	B4	VBUS	Bus Power
A10			B3		
A11			B2		
A12	GND	Ground return	B1	GND	Ground return

CVILUX
2023.04.27
ISSUED

Lead Free Process | RoHS Compliant

SYM	NAME	DATE	REVISIONS
4			
3			
2			
1	Ash	2023.3.31	ECRD123017 REVISIONS

		DATE
DRAWN BY:	Ash	03/09-23'
ENGINEER:	Ash	03/09-23'
CHECKED BY:	Keny	03/09-23'
APPROVED BY:	Keny	03/09-23'

UNIT: mm / inch

TOLERANCE UNLESS OTHERWISE SPECIFIED

.X ± 0.30/.012	X.° ± 2°
.XX ± 0.20/.008	.X° ± 1°
.XXX ± 0.10/.004	.XX° ± 0.5°

TITLE: Type C/F 14pin and USB 2.0 female single One side plug-in two in one

MATERIAL:

FINISH:

瀚荃股份有限公司
CviLux Corporation

DRAWING NO.	CU36S02SB	PART NO.	CU3614S*DCLA002-LF
SCALE	1 / 1	SHEET	2 OF 3

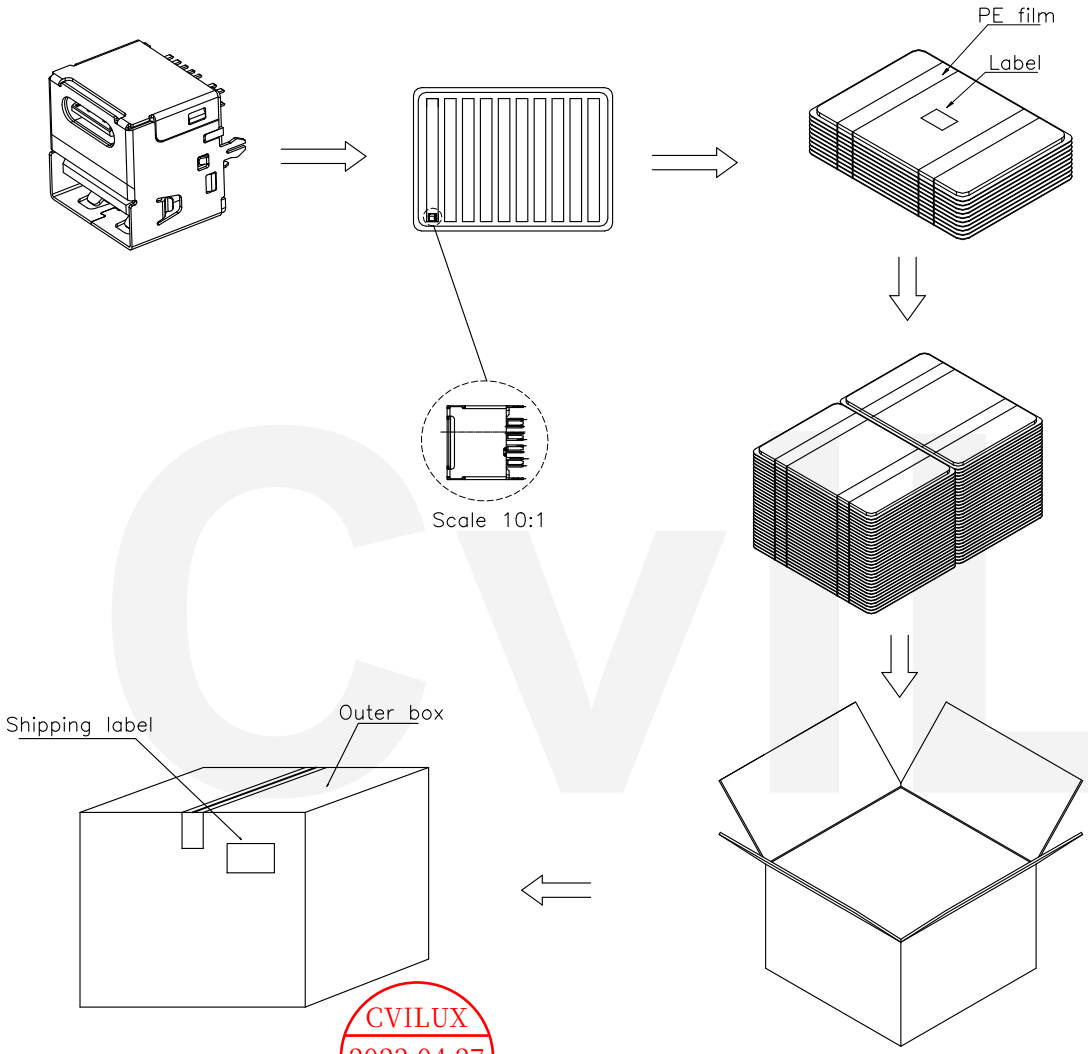

1. Packing method:

1.1. The finished products of the fully inspected ok are loaded into the blister shell according to the required quantity.

1.2. Stack the products filled with trays and fold each bundle with PE film Label and specify the name, date, quantity of the product on the label.

1.3. Place each bundle of bundled products neatly into the outer box as shown.

1.4. After sealing the outer box with transparent glue, attach the outer box label.

2. Packaging quantity:
100PCS/disk;
30 discs (100pcs)
3000pcs/carton

CVILUX
2023.04.27
ISSUED

Lead Free Process | RoHS Compliant

SYM	NAME	DATE	REVISIONS
4			
3			
2			
1	Ash	2023.3.31	ECRD123017 REVISIONS

		DATE
DRAWN BY:	Ash	03/09-23'
ENGINEER:	Ash	03/09-23'
CHECKED BY:	Keny	03/09-23'
APPROVED BY:	Keny	03/09-23'

UNIT: mm / inch

TOLERANCE UNLESS OTHERWISE SPECIFIED

.X ±	X.° ±
.XX ±	.X° ±
.XXX ±	.XX° ±

TITLE: Type C/F 14pin and USB 2.0 female single One side plug-in two in one

MATERIAL:

FINISH:

瀚荃股份有限公司
CviLux Corporation

DRAWING NO.	CU36S02SB	PART NO.	CU3614S*DCLA002-LF
SCALE		SHEET	3 OF 3