# Centronic Connector
# Flat Cable Type Metal Shell

## 57F Series

### MALE

**Specifications:**

**Shell:** Steel Nickel plated
**Pin Contact:** Phosphor bronze Gold plated over nickel
**Insulator:** Polyester Resin & Glass Reinforced UL-94V-O
**Number Of Contact:** 14, 24, 36, 50
**Current Rating:** 1 amp.
**Dielectric Withstanding Voltage:** 500V at sea level
**Insulator Resistance:** 1000MΩ Min at 500V DC
**Temperature:** −55°C ~ +105°C

**MALE**

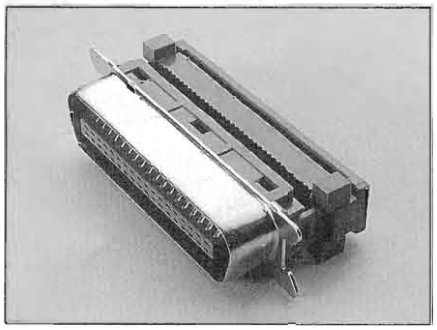

### FEMALE

**Specifications:**

**Shell:** Steel Nickel plated
**Socket Contact:** Phosphor bronze Gold plated over nickel
**Insulator:** Polyester Resin & Glass Reinforced UL-94V-O
**Number Of Contact:** 24, 36, 50
**Current Rating:** 1 amp.
**Dielectric Withstanding Voltage:** 500V at sea level
**Insulator Resistance:** 1000MΩ Min at 500V DC
**Temperature:** −55°C ~ +105°C

**FEMALE**

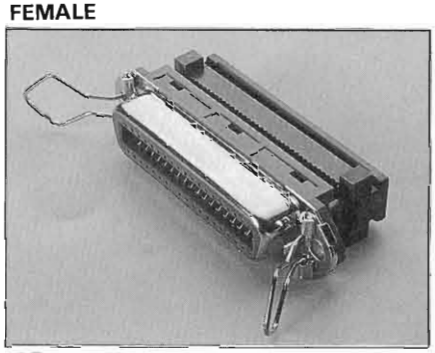

**MALE**

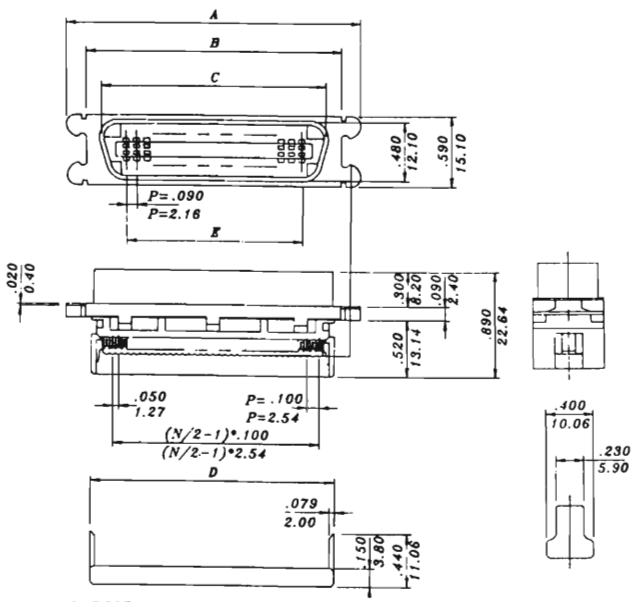


**FEMALE**

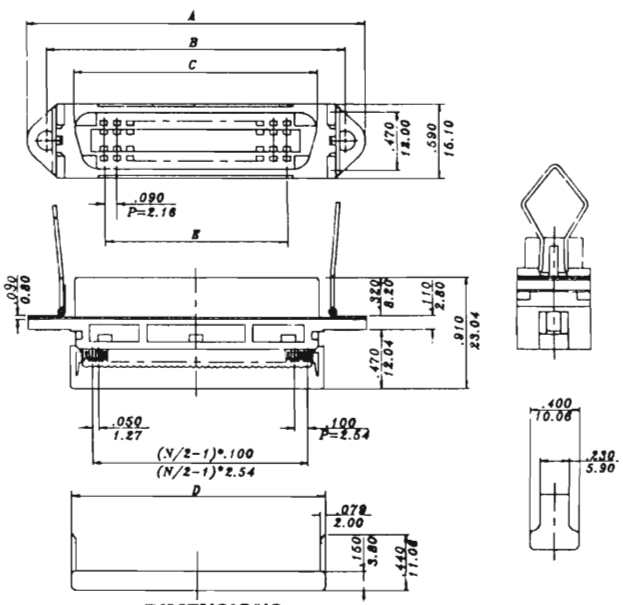


**DIMENSIONS**

| Shell Size | A | B | C | D | E |
|---|---|---|---|---|---|
| 57F-14MB | 1.49<br>37.80 | 1 17<br>29.60 | 1.00<br>25.50 | 0.90<br>22.85 | 0.51<br>12.96 |
| 57F-24MB | 3.91<br>48.60 | 1.59<br>40.40 | 1.43<br>36.30 | 1.40<br>35.55 | 0.94<br>23.76 |
| 57F-36MB | 2.43<br>61.60 | 2.10<br>53.40 | 1.94<br>49.20 | 2.00<br>50.79 | 1.45<br>36.72 |
| 57F-50MB | 3.01<br>76.40 | 2.69<br>68.20 | 2.55<br>64.80 | 2.70<br>68.57 | 2.04<br>51.84 |

57F-14MB
MB: Male with metal shell

**DIMENSIONS**

| Shell Size | A | B | C | D | E |
|---|---|---|---|---|---|
| 57F-14FB | 1 73<br>44.00 | 1.42<br>36.00 | 1.00<br>25.30 | 0.90<br>22.85 | 0.51<br>12.96 |
| 57F-24FB | 2.15<br>54.70 | 1.84<br>46.78 | 1.42<br>35.95 | 1.40<br>35.55 | 0.94<br>23.76 |
| 57F-36FB | 2.67<br>67 70 | 2.35<br>59.74 | 1.92<br>48.80 | 2.00<br>50.79 | 1.45<br>36.74 |
| 57F-50FB | 3.26<br>82.80 | 2.95<br>74.85 | 2.53<br>64.25 | 2.70<br>68.57 | 2.04<br>51.84 |

57F-14FB
FB: Female with metal shell