TYPE 220 + 222

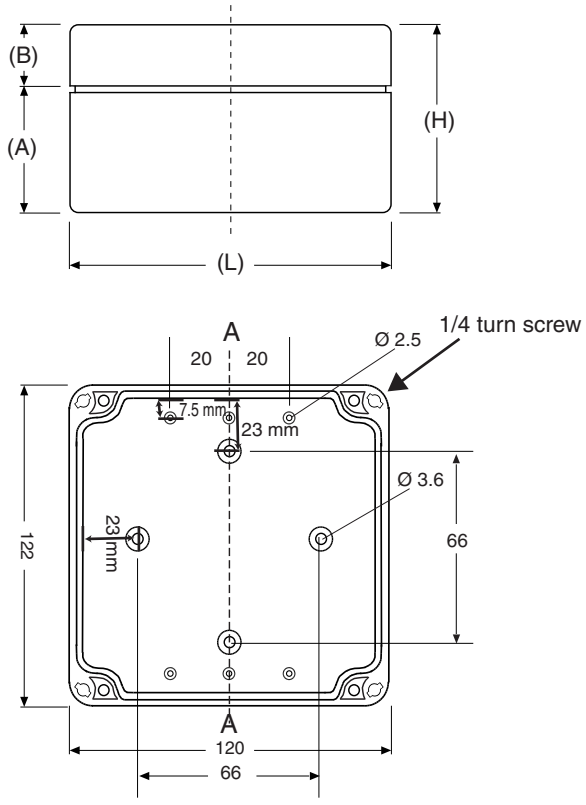

TYPE 203

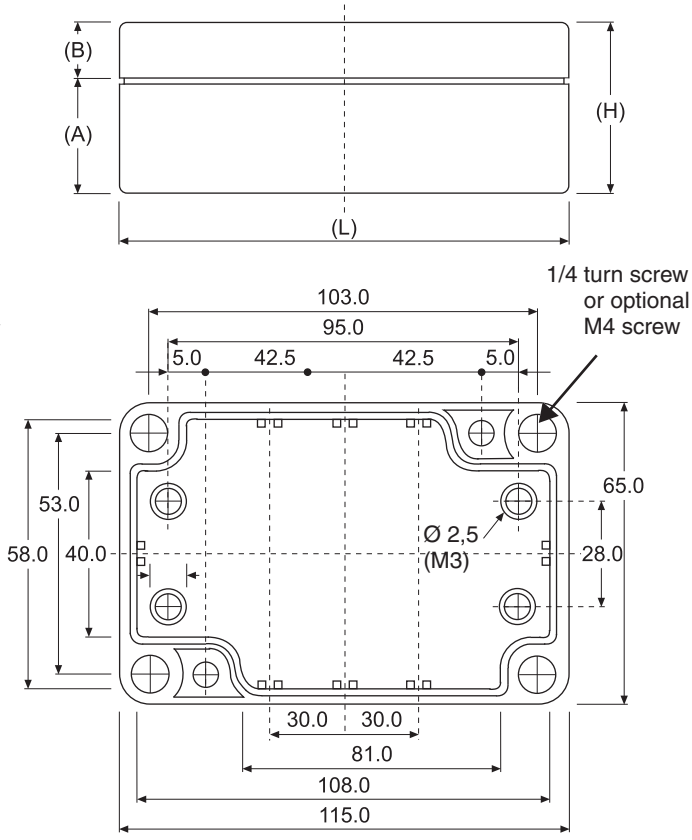

TYPE 212

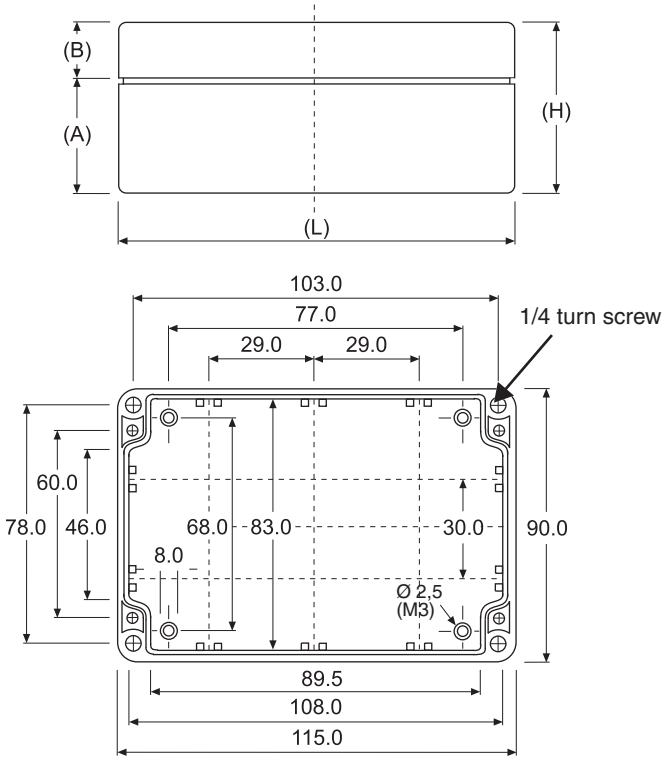

TYPE 214

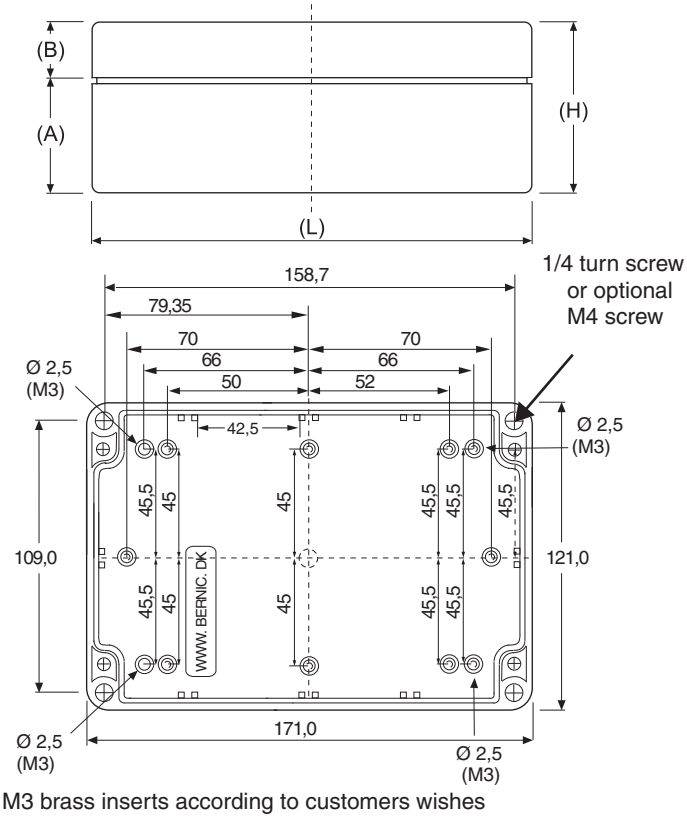

For all types: Spacers can on order be placed and fitted with M3 brass inserts according to customers wishes

● All measurements are in mm.

Technical drawings not shown here are available on: www.bernic.dk