This is an explanatory drawing. The contents of this drawing are only for reference unless explicitly agreed to by Degson. Unauthorized use, reproduction, or disclosure of this drawing is strictly prohibited. All rights reserved by Degson Electronics. 非特别授权，否则禁止转载、复制、利用、变造本文件的内容，侵犯者须赔偿损失。本公司保留对涉及侵权、处罚事项的追究权利。All rights reserved.

未注公差/General Tolerances(mm)

0~3	>3~6	>6~10	>10~18	>18~30	>30~50	>50~80	>80~120	>120~180	>180~250	>250~315	>315~400	>400~500	>500
±0.08	±0.12	±0.18	±0.22	±0.28	±0.34	±0.37	±0.57	±0.80	±0.93	±1.05	±1.15	±1.30	±2.20

0.05/10

±1°

UL 标准/UL Standard:	B	C	D
额定电压/电流/Rated Voltage(V)/Current(A)	300/30	300/30	/
IEC 标准/IEC Standard:			
过压类别/Overvoltage Category/污染等级/Pollution Degree	III/3	III/2	II/2
额定电压/电流/Rated Voltage(V)/Current(A)	500/32	/	/
额定脉冲电压(KV)/Rate Impulse Voltage(KV)	6		
螺丝扭矩/Torque Tightening(N·m/Lb.in)	M3, 0.66/6.0		
线径范围(硬线和软线)/Wire Range(rigid and flexible)(AWG/mm²)	22~10 / 0.5~4		
间距/Pitch(mm)/线数范围/Poles	6.1/01P		
剥线长度/Stripping length(mm)	8~9		
使用温度范围/Operating temperature(°C)	-40~+105		
符合RoHS环保要求/Conform to RoHS	Yes		

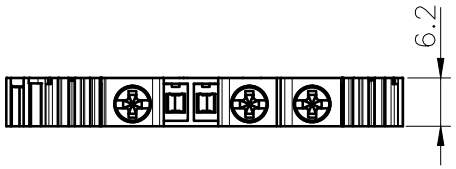

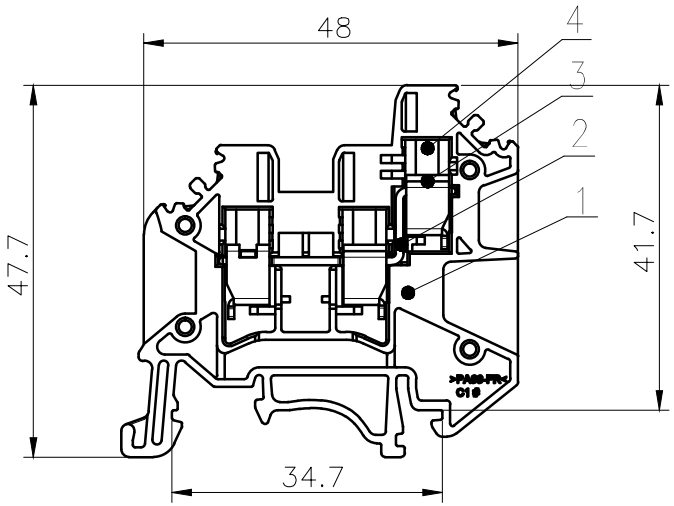

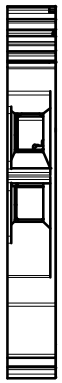

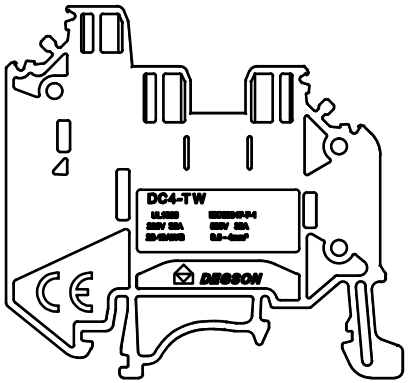

ITEM	NAME OF PART	MATERIAL	NOTES
4	Cage	Steel	Zn Plated
3	Screw	Steel	M3/Zn Plated
2	Current carrier	Copper	Sn Plated
1	Housing	PA66	UL94V-0

DEGSON

APPD:	Li GL	2022.09.20
CHKD:	Ma EK	2022.09.20
DRFT:	Li HL	2022.09.20

A4 mm (inch)

MATERIAL: | SURFACE:

MAT NO./REV: / | MAT STATUS:

NAME: DC4-TW-01P-1Y-00A(H)

DRAWING NO. | TYPE | DRAWING STATUS | SCALE 1:1 | SHEET 1/1

REV	ECN	DESCRIPTION	DRFT	DATE