Notes:

* Insulator: PBT, UL 94V-0, Color:Black
* Contacts: Copper alloy
* Boardlock: Copper alloy, Tin Plated
* Shell: SPCC, Nickel Plated
* Bracket: Zinc Alloy, Nickel Plated
* For Lead Free Wave Flow Process

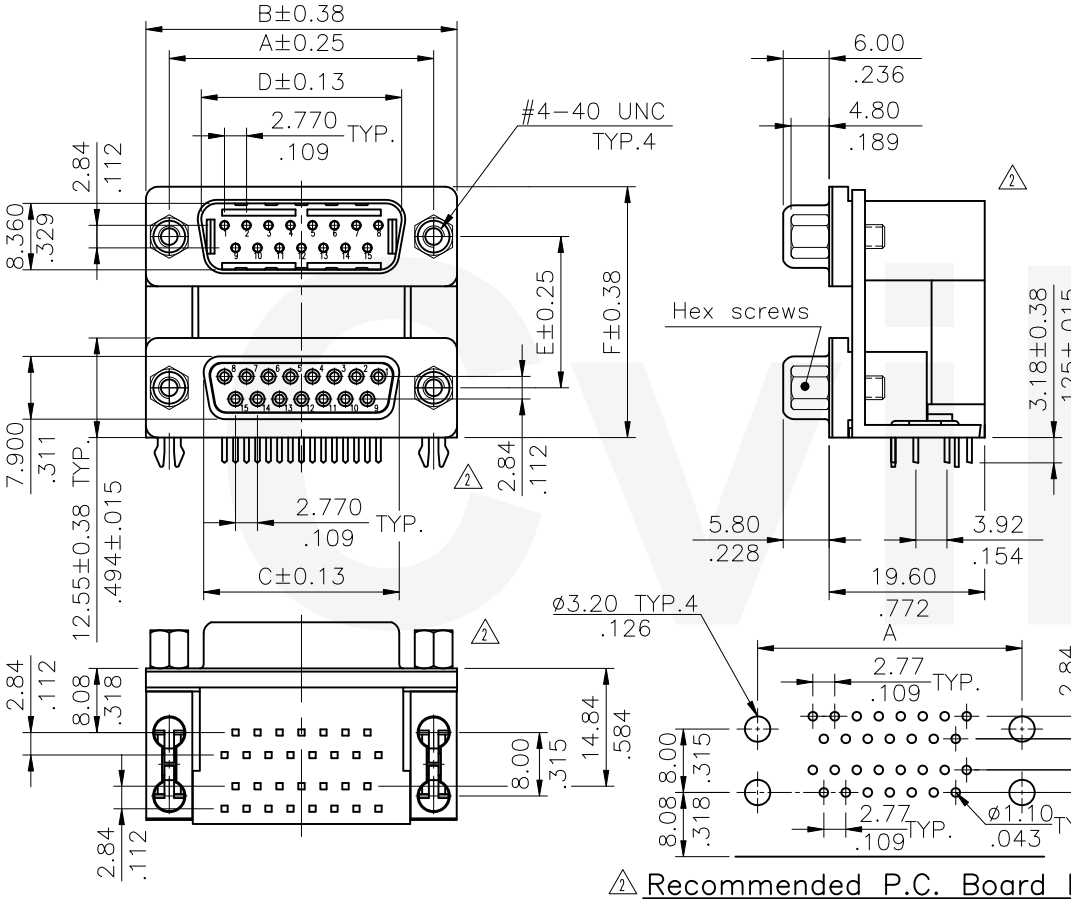

2 Recommended P.C. Board Layout

Ordering Code:

CD81 V1 PS A A C
① ② ③ ④ ⑤ ⑥

① Series No.

② Configuration: V1= 9 To 9 ; V2= 15 To 15
V3= 25 To 25 ; V7= 37 To 37

③ Concact type: PS= Plug to Sockeet

④ Plating option:
A= Selective Gold flash plated over 1.27μm(50μ) Nickel
B= Selective 0.38μm(15μ") Gold plated over 1.27μm(50μ") Nickel
C= Selective 0.76μm(30μ") Gold plated over 1.27μm(50μ") Nickel

⑤ Row spacing: A= Dim. E 15.88mm
B= Dim. E 19.05mm
C= Dim. E 22.86mm

⑥ Other Option:
C= Riveted ground hooks with #4-40UNC open
S= Riveted ground hooks Pre-Loaded #4-40UNC Hex screws

2 3

CVILUX P/N	Dimension					
	A	B	C	D	E	F
CD81V1PS*A*	24.99(.984)	30.81(1.213)	16.33(.643)	16.92(.666)	15.88(.625)	28.43(1.119)
CD81V2PS*A*	33.32(1.312)	39.19(1.543)	24.66(.971)	25.25(.994)		
CD81V3PS*A*	47.04(1.852)	53.04(2.088)	38.38(1.511)	38.96(1.534)		
CD81V7PS*A*	63.50(2.500)	69.32(2.729)	54.84(2.159)	55.42(2.182)		
CD81V1PS*B*	24.99(.984)	30.81(1.213)	16.33(.643)	16.92(.666)	19.05(.750)	31.60(1.244)
CD81V2PS*B*	33.32(1.312)	39.19(1.543)	24.66(.971)	25.25(.994)		
CD81V3PS*B*	47.04(1.852)	53.04(2.088)	38.38(1.511)	38.96(1.534)		
CD81V7PS*B*	63.50(2.500)	69.32(2.729)	54.84(2.159)	55.42(2.182)		
CD81V1PS*C*	24.99(.984)	30.81(1.213)	16.33(.643)	16.92(.666)	22.86(.900)	35.41(1.394)
CD81V2PS*C*	33.32(1.312)	39.19(1.543)	24.66(.971)	25.25(.994)		
CD81V3PS*C*	47.04(1.852)	53.04(2.088)	38.38(1.511)	38.96(1.534)		
CD81V7PS*C*	63.50(2.500)	69.32(2.729)	54.84(2.159)	55.42(2.182)		

Lead Free Process

RoHS Compliant

CVILUX CORP
2018.09.05
ISSUED

SYM	NAME	DATE	REVISIONS
4			
3	Ken	10/20-16'	ECNT116249
2	Ken	7/27-16'	ECRT116064/ECNT116182
1	Sun	12/30/04	ECN04519

		DATE
DRAWN BY:	Ken	10/21-16'
ENGINEER:	Sun	10/21-16'
CHECKED BY:	Eisley	10/24-16'
APPROVED BY:	Eisley	10/24-16'

UNIT: mm / inch

TOLERANCE UNLESS OTHERWISE SPECIFIED

.X ±	X.° ± 1°
.XX ± 0.25/.010	.X° ±
.XXX ± 0.13/.005	.XX° ±

TITLE: STACKED SIDE ENTRY BOARD MOUNT D-SUB

MATERIAL:

FINISH:

瀚荃股份有限公司
CviLux Corporation

DRAWING NO.	CD8104SH	PART NO.	CD81V*PS***
SCALE	1 / 1	SHEET 1 OF 1	