Panasonic
INDUSTRY

Your Committed Enabler

Products Catalog

Aluminum Electrolytic Capacitors

Surface Mount Type

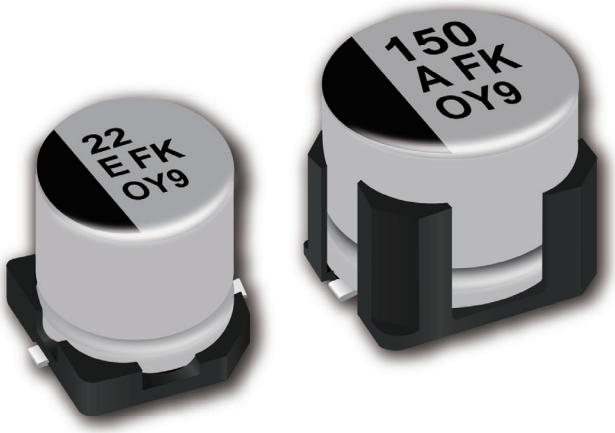

2026.4

Aluminum Electrolytic Capacitors (Surface mount type) INDEX

Item			Page
Safety and Legal Matters to Be Observed / Matters to Be Observed When Using This Product			1
Selection guide	Series flow chart		8
	Explanation of part numbers		9
	Recommendable reflow solde		10
	Mounting specifications		11
	Packaging specifications		12
Series	NRFND S series (High temperature Lead-Free reflow, suffix A∗)	: 85 ℃ 2000 h	14
	NRFND S series	: 85 ℃ 2000 h	17
	NRFND HA series (High temperature Lead-Free reflow, suffix A∗)	: 105 ℃ 1000 h	22
	NRFND HA series	: 105 ℃ 1000 h	25
	HB series (High temperature Lead-Free reflow, suffix A∗)	: 105 ℃ 2000 h	29
	NRFND HB series	: 105 ℃ 2000 h	32
	HC series	: 105 ℃ 3000 to 5000 h	35
	HD series (High temperature Lead-Free reflow, suffix A∗)(Standard Lead-Free reflow)	: 105 ℃ 5000 h	37
	HD series: Medium-size (High temperature Lead-Free reflow, suffix A∗)	: 105 ℃ 5000 h	39
	NRFND FC series (High temperature Lead-Free reflow, suffix A∗)	: 105 ℃ 1000 h	41
	NRFND FC series	: 105 ℃ 1000 h	43
	FK series (High temperature Lead-Free reflow, suffix A∗)	: 105 ℃ 2000 h	45
	FK series: Medium-size (High temperature Lead-Free reflow, suffix A∗)	: 105 ℃ 5000 h	47
	FK series: Halogen-free (High temperature Lead-Free reflow, suffix A∗)	: 105 ℃ 2000 h	49
	FK series	: 105 ℃ 2000 to 5000 h	51
	FK series: Halogen-free	: 105 ℃ 2000 to 5000 h	55
	NRFND FKS series (High temperature / Standard Lead-Free reflow)	: 105 ℃ 2000 h	57
	FKS series: Medium-size (High temperature Lead-Free reflow)	: 105 ℃ 5000 h	60
	NRFND FKS series: Halogen-free (High temperature / Standard Lead-Free reflow)	: 105 ℃ 2000 h	62
	FN series (High temperature / Standard Lead-Free reflow)	: 105 ℃ 2000 h	64
	FN series: Halogen-free (High temperature / Standard Lead-Free reflow)	: 105 ℃ 2000 h	68
	FT series (High temperature Lead-Free reflow)	: 105 ℃ 2000 to 5000 h	71
	FT series: Halogen-free (High temperature Lead-Free reflow)	: 105 ℃ 2000 h	74
	FP series (High temperature Lead-Free reflow, suffix A∗)	: 105 ℃ 2000 h	76
	FP series: Halogen-free (High temperature Lead-Free reflow, suffix A∗)	: 105 ℃ 2000 h	79
	FH series: Halogen-free (High temperature Lead-Free reflow, except 50 to 100 V)	: 105 ℃ 10000 h	81
	TG series	: 125 ℃ 1000 to 2000 h	83
	TK series	: 125 ℃ 3000 h	86
	TK series: Medium-size (High temperature Lead-Free reflow, suffix A∗)	: 125 ℃ 2000 h	88
	TP series (High temperature Lead-Free reflow, suffix A∗)	: 125 ℃ 3000 h	90
	TP series: Medium-size (High temperature Lead-Free reflow)	: 125 ℃ 3000 to 4000 h	92
	TC series (High temperature Lead-Free reflow)	: 125 ℃ 3000 h	94
	TCU series (High temperature Lead-Free reflow)	: 125 ℃ 3000 h	96
	TQ series (High temperature Lead-Free reflow, suffix A∗)	: 125 ℃ 2000 h	98

NRFND Not recommended for new design

Safety and Legal Matters to Be Observed

Product specifications and applications

■ Please be advised that this product and product specifications are subject to change without notice for improvement purposes. Therefore, please request and confirm the latest delivery specifications that explain the specifications in detail before the final design, or purchase or use of the product, regardless of the application. In addition, do not use this product in any way that deviates from the contents of the company's delivery specifications.

■ Unless otherwise specified in this catalog or the product specifications, this product is intended for use in general electronic equipment (AV products, home appliances, commercial equipment, office equipment, information and communication equipment, etc.).
When this product is used for the following special cases, the specification document suited to each application shall be signed/sealed (with Panasonic Industry and the user) in advance..These include applications requiring special quality and reliability, wherein their failures or malfunctions may directly threaten human life or cause harm to the human body (e.g.: space/aircraft equipment, transportation/traffic equipment, combustion equipment, medical equipment, disaster prevention/crime prevention equipment, safety equipment, etc.).

Safety design and product evaluation

■ Please ensure safety through protection circuits, redundant circuits, etc., in the customer's system design so that a defect in our company's product will not endanger human life or cause other serious damage.

■ This catalog shows the quality and performance of individual parts. The durability of parts varies depending on the usage environment and conditions. Therefore, please ensure to evaluate and confirm the state of each part after it has been mounted in your product in the actual operating environment before use.
If you have any doubts about the safety of this product, then please notify us immediately, and be sure to conduct a technical review including the above protection circuits and redundant circuits at your company.

Laws / Regulations / Intellectual property

■ The transportation of dangerous goods as designated by UN numbers, UN classifications, etc., does not apply to this product. In addition, when exporting products, product specifications, and technical information described in this catalog, please comply with the laws and regulations of the countries to which the products are exported, especially those concerning security export control.

■ Each model of this product complies with the RoHS Directive (Restriction of the use of hazardous substances in electrical and electronic equipment) (2011/65/EU and (EU) 2015/863). The date of compliance with the RoHS Directive and REACH Regulation varies depending on the product model.
Further, if you are using product models in stock and are not sure whether or not they comply with the RoHS Directive or REACH Regulation, please contact us by selecting "Sales Inquiry" from the inquiry form.

■ During the manufacturing process of this product and any of its components and materials to be used, Panasonic Industry does not intentionally use ozone-depleting substances stipulated in the Montreal Protocol and specific bromine-based flame retardants such as PBBs (Poly-Brominated Biphenyls) / PBDEs (Poly-Brominated Diphenyl Ethers). In addition, the materials used in this product are all listed as existing chemical substances based on the Act on the Regulation of Manufacture and Evaluation of Chemical Substances.

■ With regard to the disposal of this product, please confirm the disposal method in each country and region where it is incorporated into your company's product and used.

■ The technical information contained in this catalog is intended to show only typical operation and application circuit examples of this product. This catalog does not guarantee that such information does not infringe upon the intellectual property rights of Panasonic Industry or any third party, nor imply that the license of such rights has been granted.

■ Design, materials, or process related to technical owned by Panasonic Industry are subject to change without notice.

Panasonic Industry will assume no liability whatsoever if the use of our company's products deviates from the contents of this catalog or does not comply with the precautions. Please be advised of these restrictions.

Matters to Be Observed When Using This Product

(Conductive polymer hybrid aluminum electrolytic capacitor / Aluminum electrolytic capacitor)

Use environments and cleaning conditions

■ This product (capacitor) is intended for standard general-purpose use in electronic equipment, and is not designed for use in the specific environments described below. Using the product in such specific environments or service conditions, therefore, may affect the performance of the product.
Check with us about the performance and reliability of the product first before using the product.

(1) Used at a temperature higher than the upper limit category temperature or lower than the lower limit category temperature.
(2) Used in an environment where the product is directly exposed to water, salt water, oil, etc., or in a liquid, such as water, oil, chemicals, and organic solvents.
(3) Used in an outdoor environment where the product is exposed to direct sunlight, ozone, radiation, UV-rays, etc., or in a dusty place.
(4) Used in a wet place (dew concentration on a resistor, water leakage, etc.), a place exposed to sea breeze, or a place filled with a corrosive gas, such as Cl_2, H_2S, NH_3, SO_2, or NO_X.
(5) Used in an environment filled with a toxic gas (hydrogen sulfide, sulfurous acid, nitrous acid, chlorine and chlorine compound, bromine and bromine compound, ammonia, etc.)
(6) Used in an environment where static electricity and electromagnetic waves are strong.
(7) Located close to heating component or a flammable material, such as a vinyl cable.
(8) Sealed with a resin, etc.
(9) Cleansed with a solvent, water, or a water-soluble cleaner, to remove solder flux after soldering.
(10) Used in an environment where an acidic or alkali atmosphere is present.
(11) Used in an environment where excessive vibration or mechanical shocks exceeding a specified range is applied to the product (even if the applied vibration or mechanical shocks is within the specified range, it may cause the product to resonate, in which a large vibration acceleration may be generated. Make sure to evaluate/check such vibrations or mechanical shocks applied to the product in an actual condition).
Panasonic Industry's conditions for vibration test are shown in the table below. Random waveform is not guaranteed.
For radial type, datasheet is also available if requested.

Item	Standard	Vibration-proof
Waveform	Sine	Sine
Frequency	10 - 55 Hz	5 - 2000 Hz
Direction	X, Y, Z axis	X, Y, Z axis
Duration	2 hours each direction	2 hours each direction
Max p-p amplitube	$1.5mm_{PP}$	$5mm_{PP}$
Max acceleration	90 m/s^2 (9.1 G)	294 m/s^2 (30 G)

(12) Used under a low atmospheric pressure condition or depressurized condition.

■ The capacitor withstands an immersion cleaning process where the board carrying the product is immersed in a cleaning solution of 60 °C or lower for less than 5 minutes and withstands an ultrasonic cleaning process as well. However, ensure to thoroughly rinse and dry it. Some cleaning methods erase or blur notes on the capacitor in some cases.
Some types of capacitors are not washable and some cleaning solutions cannot be used to clean a capacitor.
The following water-base solvents have been validated for cleaning. Contact a sales representative for more information.

Pine Alpha ST-100S, Cleanthrough 750H/750L/710M

■ Keep the cleaning solution under strict contamination control (conductivity, pH, specific gravity, water content, etc.).
A contaminated cleaning solution will show a high chlorine concentration, thereby corroding the interior of the capacitor in some cases. Keep the flux concentration in the cleaning solution at a 2% mass or less.

■ Unless otherwise specified in the specifications, avoid cleaning the capacitor with a halogen-based solvent, an alkaline solvent, a petroleum-based solvent, xylene, or acetone. Using a halogen-based solvent may result in a case where the solvent infiltrates (leaks) into the capacitor and break-down releasing chlorine, which reacts with aluminum which can corrode the capacitor interior. 1-1-1 trichloroethane is particularly harmful to a capacitor. Never use it to clean a capacitor.
A alkaline solvent may corrode (dissolve) an aluminum case, a petroleum-based solvent and xylene may damage the sealing rubber and accelerate its deterioration, and acetone may erase notes on the capacitor.
To protect the global environment, refrain from using an ozone depleting substance as the cleaning solution.

■ Right after the board cleaning, subject the capacitor to a forced drying process so that no cleaning solution remains between the sealing part of the capacitor and the printed board.
Set a drying temperature equal to or lower than the upper limit category temperature.

■ When an adhesive or coating agent is used to fix the capacitor and prevent dampening of the board, specific types of solvents included in some adhesives or coating agents may corrode the capacitor. Select a non-halogen solvent for the material making up the adhesive or coating agent. Do not use a chloroprene-based polymer.
Solidify and dry the adhesive or coating agent sufficiently to prevent its solvent component from remaining on the capacitor. Leave at least 1/3 of the sealing part unsealed on the surface to which the adhesive or coating agent is applied.

■ Do not use the product in a structure sealed by potting or molding. The pressure of a molding resin on a capacitor may deform the capacitor. In addition, the resin covering the capacitor may affect its heat dissipation performance or may leak into the product. These factors lead to the significant degradation of the capacitor's characteristics and reliability.
There is also a concern that an electrolytic solution permeating the sealing rubber may agglomerate and cause a short circuit.

■ When the capacitor is used in a circuit where an impact voltage is applied or a high voltage is applied in a short period (transient phenomenon) or a high pulse voltage is applied, make sure to use the capacitor at a voltage equal to or lower than its rated voltage.

■ The product contains an electrolytic. Improper use of the capacitor leads not only to the rapid degradation of its characteristics but also to electrolytic leakage. These problems damage the circuit board and may lead to destruction of the entire circuit set.

Response to anomalies and handling conditions

■ When you see gas coming out of an activated pressure relief valve of a capacitor during use of a circuit set, turn off the main power supply of the circuit set or pull the power cord plug out of the wall-outlet. If you leave the power supply on and the capacitor short-circuits, it will damage the circuit, or the gas can turn into a liquid, which will cause the circuit to short. In the worst case scenarios, these events may develop into a more serious incident, such as burnout of the circuit set. The gas coming out of the pressure relief valve of a capacitor is not smoke, but is the electrolytic solution in its gaseous state.

■ When the pressure valve of the capacitor is activated, it emits a high-temperature gas of over 100 °C. Do not bring your face near the valve. In case the gas jetting out of the valve gets in your eyes or comes into your mouth, wash your eyes with water or rinse your mouth immediately. If the gas hits your skin, wash it away with soap.

■ If you touch a terminal of the product during use of the circuit set, you will get an electric shock. The aluminum case of the product has an exposed part with no insulation. Do not touch the exposed part because it is as dangerous as the terminal.

■ Do not create a short circuit between terminals of the product by inserting a conductor therebetween. Do not splash a conductive solution, such as an acidic or alkali solution, on the capacitor. It puts the capacitor in a shorted state, which causes the circuit to fail and destroys the capacitor as well.

■ When a silicone material containing a relatively large amount of a low-molecular-weight siloxane is located close to the product, it may cause the capacitor problems with its electrical performance.

■ When electronic equipment having the capacitor built therein is exported to overseas markets, wooden packaging materials are fumigated with a halogen compound, such as methyl bromide. In such cases, if the packaging material subjected to the fumigation treatment is not dried sufficiently, halogen remaining on the packaging material may leach into the capacitor during transportation and trigger a corrosive reaction in the capacitor. When carrying out the fumigation treatment, carefully examine the dried packaging material to confirm that no halogen remains on the packaging material. Never fumigate the entire electronic equipment in its packaged state.

Reliability and product life

■ The product life is affected by temperatures. In general, a 10 °C drop in the temperature will double the life.
Use the capacitor at a temperature as low as possible from the upper limit category temperature.

■ Using a capacitor under a temperature condition outside a specified temperature range causes heavy degradation of the capacitor characteristics, which may result in breakage of the capacitor. You need to confirm not only the ambient temperature and internal temperature of the capacitor but also the temperature of the capacitor's top surface, which is given by radiant heat from built-in heating elements (a power transistor, IC, resistance, etc.) and heat generated by self-heating induced by ripple current. Do not place a heating element on the back of the capacitor.

■ The product life is given by the following equation.

$$L2 = L1 \times 2^{\frac{T1-(T2+\Delta T)}{10}} \quad \text{Where } T1 \geqq T2$$

L1 : Guaranteed life (h) at temperature T1 (°C)
L2 : Expected life (h) at temperature T2 (°C)
T1 : Upper category temperature (°C)
T2 : Ambient temperature of capacitor (°C)
⊿T : Temperature increase caused by ripple current (°C)

* In the case of a hybrid type, category temperature (°C) + temperature increase caused by rated ripple current (°C)

■ Do not use the product for a period longer than its specified service life. A capacitor with its service life ended may cause the following problems: rapid degradation of the product characteristics, short circuit, unnecessary activation of the pressure valve, electrolytic solution leakage, etc. Note that the estimated service life is not longer than 15 years due to the limited environment-resistant property of the sealing rubber.

■ When the capacitor is used under a high-temperature condition for a long period, minute cracks develop on the surface of the sealing rubber or the case surface turns brown in some cases. These phenomena, however, have no effects on the reliability of the capacitor.

■ A capacitor conforming to "AEC-Q200" refers to a capacitor having passed some or all of evaluation test items defined in AEC-Q200.
To know the detailed specifications of each capacitor or specific evaluation test scores, please contact us.
We issue a the product specifications sheet for each product ordered. Please confirm the product specifications sheet when you place an order to us.

Circuit design and circuit board design

■ The electrical characteristics change as a result of temperature/frequency fluctuations. Take electrical characteristic changes into consideration when working out a circuit design.

(1) Temperature fluctuations
High-temperature condition : increase in leak current
Low-temperature condition : decrease in capacitance, increase in the tangent to the loss angle, increase in impedance (the hybrid type is excluded), etc.
(2) Frequency fluctuations
High-frequency condition : decrease in capacitance, increase in the tangent to the loss angle, decrease in impedance, etc.
Low-frequency condition : more heat generation by ripple current as a result of an increase in equivalent series resistance

■ The group of factors described below may lead to rapid degradation of the capacitor characteristics, short circuit, or electrolytic solution leakage. They may give rise to sharp heat/gas generation, too, in which case the increasing internal pressure actuates the pressure valve, causes the electrolytic solution to leak out of the sealing part, and, in a worst-case scenario, causes an explosion or ignition incident. When a capacitor bursts, it may scatter flammable materials (electrolytic solution, etc.) in its surroundings.

(1) Reverse voltage: The capacitor has preset polarity. Do not apply a reverse voltage to the capacitor.
Confirm the polarity indicated on the capacitor and then use it.
(2) Charge/discharge: Avoid using the capacitor in a circuit that frequently repeats sharp charge/discharge cycles or a circuit that requires relatively slow but highly frequent charge/discharge cycles. In cases where you use the capacitor in such circuits, make sure to inform us of the charge/discharge conditions.
Ensure that a rush current does not exceed 100 A.
(3) ON/OFF: Avoid using the capacitor in an on/off circuit that repeatedly switches on and off more than 10,000 times a day. In cases where you use the product in such circuits, make sure to inform us of the circuit conditions, etc.
(4) Overvoltage: Do not apply an overvoltage higher than the rated voltage (higher than the surge voltage when the voltage application period is short). A peak value given by superposing a ripple voltage (AC component) on a DC voltage must be equal to or lower than the rated voltage.
(5) Ripple current: Do not allow an excessively large ripple current (larger than the rated ripple current specified in the specifications) to flow through the capacitor. Even if a ripple current flow in the capacitor is equal to or smaller than the rated ripple current, a reverse voltage flow may be generated in the capacitor when the DC bias voltage is low flow in the capacitor. Keep the ripple current flow within a range in which no reverse voltage is generated.
Even if the ripple current flow is kept equal to or smaller than the rated ripple current, using the capacitor for a period longer than its service life intensifies the degradation of the ESR characteristics, resulting in an increase in internal heating caused by the ripple current. As a result, the pressure valve is actuated, the exterior case or rubber swells, the electrolytic solution leaks, and, in a worst-case scenario, the capacitor short-circuits and ignites or explodes.

- Because the impedance of the capacitor is close to the circuit impedance, capacitors connected in parallel in the circuit may damage the whole current balance, in which, a ripple current higher than the rated ripple current may flow in some of the capacitors. To prevent concentration of ripple current on the low-impedance side, use capacitors with the same part number and avoid the partiality of cable impedances. Do not use capacitors connected in series.

- When the capacitor is mounted on a double-side wiring board, do not place the wiring pattern directly underneath where the product is mounted. In case the electrolytic solution leaks out, it may short-circuit the pattern and cause tracking or migration. Consider a case where the product is a radial lead capacitor and is mounted on a board with through-holes. In this case, if the sealing part of the capacitor and the board surface stick close to each other, solder flows up to the capacitor during a dip soldering process, which may cause short circuit between the anode and cathode of the capacitor. In such a case, the outer laminate of the product may be damaged. The position of holes, therefore, must be determined properly.

- When designing a printed board carrying radial lead capacitors, make through-holes across the gap equal to the gap between the leads (terminals) of the capacitor. If the gap between the through-holes is narrower or wider than the gap between the leads, stress is applied to the leads when the capacitor is inserted in the holes.
  This may result in increasing leak current, short circuit, wire breaking, or electrolytic solution leakage.

- A capacitor which has the pressure valve on the case must be provided with a space formed above the pressure valve so that the pressure valve operates without hinderance. When the product is 6.3 mm to 16 mm in diameter, form a space of 2 mm or larger. When the product is 18 mm in diameter, form a space of 3 mm or larger.
  If the space is not large enough, it will impair the operability of the pressure valve and may lead to an explosion incident.

- Design the circuit in such that the pattern, especially a line pattern carrying high voltage or large current, is not formed above the pressure valve. Upon its activation, the pressure valve emits a flammable high-temperature gas of over 100 °C. This may cause a secondary accident, such as the gas condensing on the pattern and the wire sheathing being melted and catching on fire.

- Be careful with resonance of the capacitor mounted on the board. When a large load is applied to the capacitor at the frequency close to the resonance frequency, it may cause the capacitor to come off or widely change its characteristics.

- Completely isolate the case of the capacitor from the cathode terminal and the circuit pattern.

- The laminate or outer sleeve covering of the product is for displaying information on the product and does not have a guaranteed insulating function.
  The laminate may turn brown under a high-temperature condition. However, that does not cause problems with markings recognition on the product surface or electrical performance.
  The outer sleeve may crack when dipped in a xylene or toluene solution and exposed to high temperature.

Mounting conditions

- Do not reuse a capacitor that was incorporated in a circuit set and energized in the past. Do not use a capacitor that was dropped on the floor.
  Do not use a capacitor in its compressed form. Compressing the capacitor makes it less airtight, resulting in poor performance, shorter guaranteed life, and electrolyte leakage.

- A re-striking voltage is generated in a capacitor in some cases. In such a case, let the capacitor discharge through a resistor of about 1 kΩ.

- When a capacitor is kept in storage for a long period, you may find the leak current from the capacitor has increased. In such a case, make voltage adjustment through a resistor of about 1 kΩ.

- Before mounting the capacitor on the board, confirm the ratings (capacitance, rated voltage, etc.) and polarity of the capacitor. Before mounting a surface-mounted type capacitor, confirm its terminal dimensions and land size.
  Before mounting a radial lead type capacitor, confirm its terminal interval and hole interval. If the terminal interval is not the specified one, stress is applied to internal elements, which may cause problems, such as a short circuit and insufficient mounting strength.
  When the terminal interval and the hole interval of the radial lead type capacitor do not match and therefore the capacitor's leads need to be readjusted, make sure that the readjustment does not apply any stress to the capacitor's body.

- Confirm the applied pressure when using an automatically mounting process for a surface-mounted type capacitor. Excessive pressure may result in increasing leak current, short circuit, the capacitor coming off from the board, and the like. When automatically mounting the radial lead type capacitor, check the wear of a cutter for cutting the leads and confirm that the angle of clinching the leads is not too acute with regards to the board. Clinching the leads at too acute of an angle applies tensile stress to the leads, which may lead to destruction of the capacitor.

- Follow soldering conditions (preheating, soldering temperature/time, the number of soldering, etc.) in the specification sheet. A high peak temperature or a long heating time causes the degradation of electrical characteristics or a reduction in the guaranteed life. Note that the specified soldering conditions indicate conditions under which the degradation of capacitor characteristics do not occur but do not indicate conditions under which stable soldering can be performed. Check and set conditions under which stable soldering can be performed, on a case-by-case basis. Measure the temperature of the capacitor, using a thermocouple bonded to the top of the capacitor with an epoxy-based adhesive. This temperature measurement must be conducted in a mass-production setup.

- The surface-mounted type capacitor is soldered by reflow soldering only. It cannot be soldered by flow soldering or dip soldering. Carry out reflow soldering with an atmospheric heat transfer method using infrared hot air, etc.
  When carrying out two rounds of reflow processes, carry out the second reflow process after the capacitor's temperature settles down to a normal temperature. In the case of VPS reflow, a sharp rise in the capacitor temperature causes a change in the characteristics and appearance of the capacitor, which may give rise to a problem with capacitor mounting. We therefore recommend execution of VPS flow at a temperature rise rate of 3 °C/second or lower. For more information about this matter, please contact us.

- Reflow soldering, under the reflow conditions we recommend, might result in discoloring or swelling of the case or crack formation on the ink mark indicating the cathode. These minor problems, however, do not affect the reliability of the capacitor at all.

- A 6.3-mm diameter vibration-resistant capacitor has a structure that covers the auxiliary terminals to the sides of a seat plate. In cases where you confirm formation of a fillet on the sides of the auxiliary terminals by an image recognition means, etc., examine soldering conditions for the formation of a sufficient fillet on the auxiliary terminals in advance before carrying out the soldering process.
  Even if the formation of a sufficient fillet on the auxiliary terminals is not confirmed, a solder junction between the lower surface of the auxiliary terminals and the board ensures vibration-resistant performance, meaning the reliability of the capacitor is not affected.

- The radial lead type capacitor cannot be soldered by reflow soldering. Do not dip the capacitor body, except the leads, in solder. Heat from the solder raises the internal pressure of the capacitor and destroys it. Solder the capacitor according to the following soldering conditions: soldering temperature of 260 °C ±5 °C and soldering time of 10 seconds ±1 second.

- Ensure that other components do not come in contact with the capacitor during the soldering process. When a radial lead type capacitor is set in close contact with the board, check the soldered state of the capacitor well, because its sealing rubber has no venting structure.

- When manually soldering the capacitor, follow the soldering conditions (soldering temperature/time) specified in the specification sheet or adopt a soldering temperature of 350 °C and a soldering time of 3 seconds or less.
  When you need to remove a capacitor already soldered, remove it after the solder is melted sufficiently so that no stress is applied to the terminals of the capacitor. Be careful not to let the solder iron tip touch the capacitor.
  The solder iron touching the capacitor may damage the capacitor.

- When the temperature of the capacitor becomes extremely high due to preheating, solidification of the setting resin, etc., may cause the outer sleeve of the capacitor to shrink or crack. When treating the capacitor in a thermosetting furnace, etc., place the capacitor in an atmosphere of 150 °C for 2 minutes or less.

- Do not tilt or twist the capacitor soldered to a printed board or hold the capacitor to carry the board or hit the capacitor against something. Such actions apply a force to the internal elements through the terminals and may destroy the product.

- Using highly active halogenous (chlorine-based or bromic) solder flux poses a concern that residual solder flux will have negative impact on the performance and reliability of the capacitor. Check the influence of residual solder flux before using such solder flux.

Storage conditions

■ A capacitor left for a long period is prone to have a greater flow of leak current. This happens because the oxide film deteriorates under a no-load condition. Voltage application to the capacitor reduces the leak current.
However, at the start of voltage application, a large flow of film recovery current increases the leak current, which may cause a circuit failure, etc.

■ The storage period of a capacitor is 42 months from the shipment inspection day. However, the storage period of capacitors not listed in the following table is specified as 12 months.
Store the capacitor in a place where a normal temperature condition (5°C to 35°C) and a normal humidity condition (45% to 85%) are maintained and direct sunlight is blocked.

Product category	Series	Storage period
Hybrid type	All hybrid series	42 months from the shipment inspection day
Surface-mounted type other than the hybrid type	S (hot lead-free reflow), HA (hot lead-free reflow) HB (hot lead-free reflow, 5.4 mm in height) HC, HD, FCA, FC, FKA, FK, FKS, FP,FT, FH, FN TG, TK, TP, TC, TCU, TQ	
Radial lead type other than the hybrid type	FC-A, FK-A, HD-A, TA-A, TP-A, FP-A	

■ Avoid storing the capacitor in environments not specified in the delivery specification sheet or in the following environments or conditions.

(1) Used at a temperature higher than the upper limit category temperature or lower than the lower limit category temperature
(2) Environments where the capacitor is exposed to water, salt water, or oil
(3) Environments where dew concentrates on the capacitor
(4) Environments filled with a toxic gas (hydrogen sulfide, sulfurous acid, nitrous acid, chlorine and chlorine compound, bromine and bromine compound, ammonia, etc.)
(5) Environments where the product is exposed to ozone, radiation, UV-rays, etc.
(6) Environments where vibrations or mechanical shocks exceeding a specified range is applied to the capacitor

Reference information

Guidelines

Some of the product use guidelines described herein are excerpted from JEITA RCR-2367D "Safety application guide for fixed aluminum electrolytic capacitors for use in electronic equipment," a technical report issued by the Japan Electronics and Information Technology Industries Association on October 2017. For more detailed information, please see the above technical report.

Intellectual property

Panasonic Group provides customers with safe products and services. We are also making great efforts to protect our intellectual property rights for Panasonic Group products. Typical patents related to this product are as follows. (Hybrid type)

[U.S. patent]
USP Nos. 7497879, 7621970, 9208954, 9595396, 9966200, 10453618, 10559432, 10679800, 10685788, 10790095, 10262806, 10896783, 11348739, 11094471, 12062501, 10563318, 10865494, 10373763

Series flow chart

Surface mount type

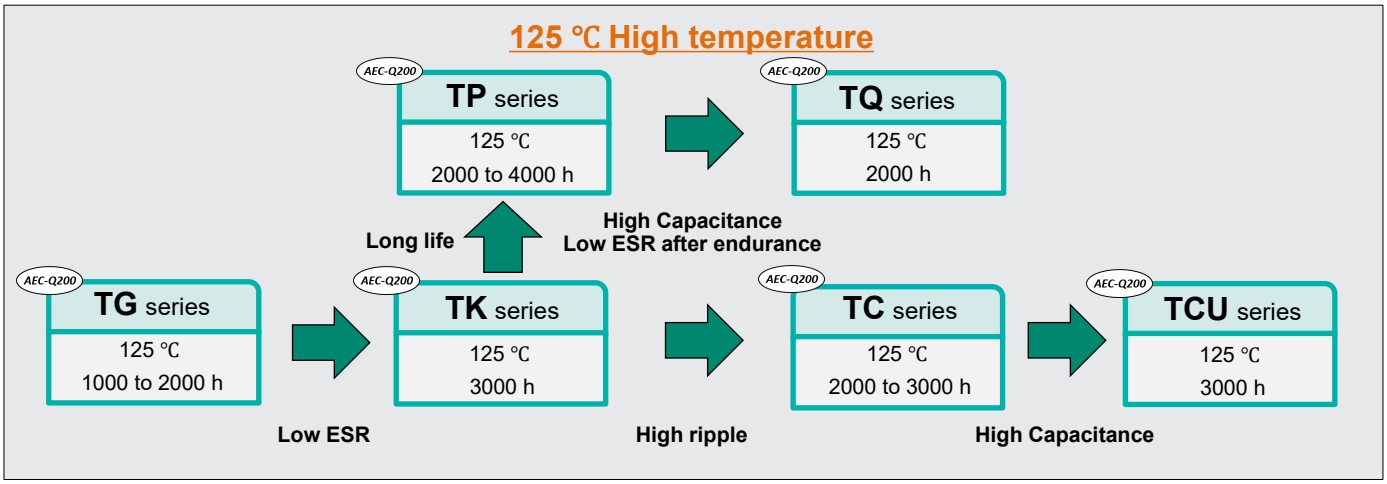

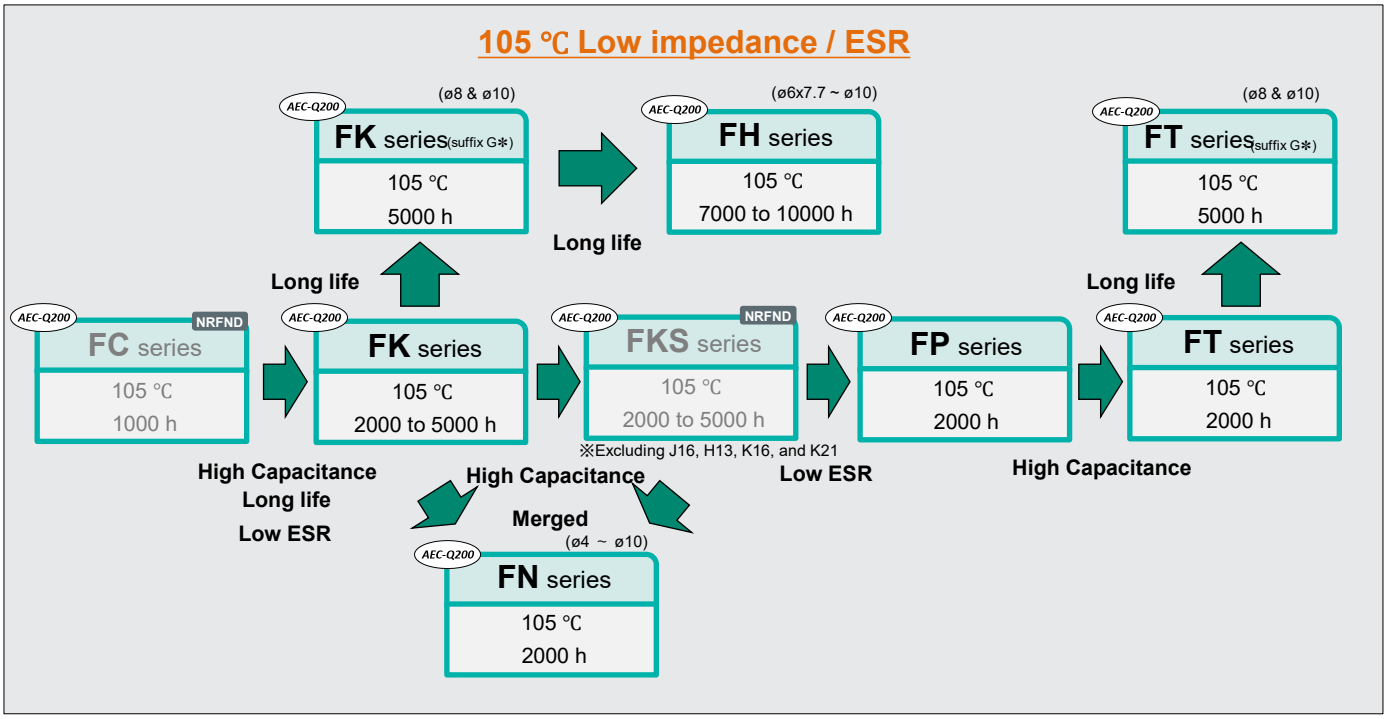

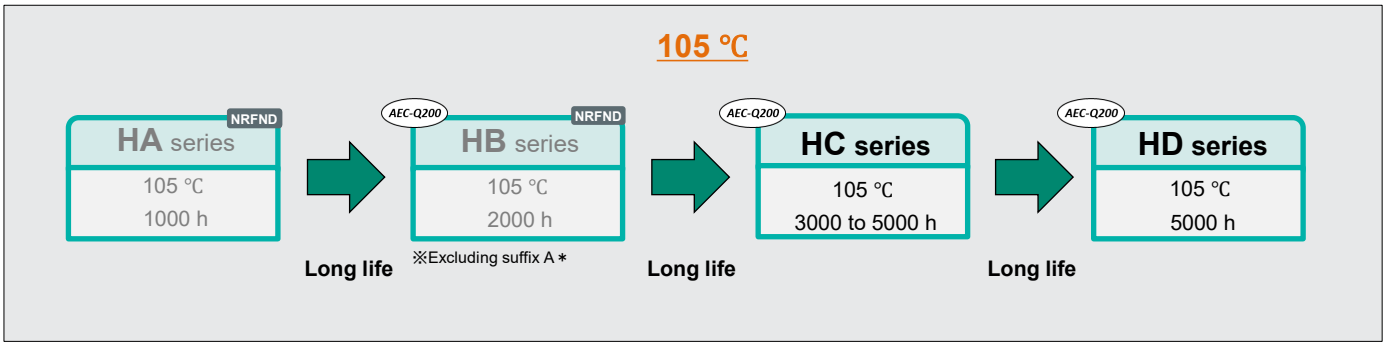

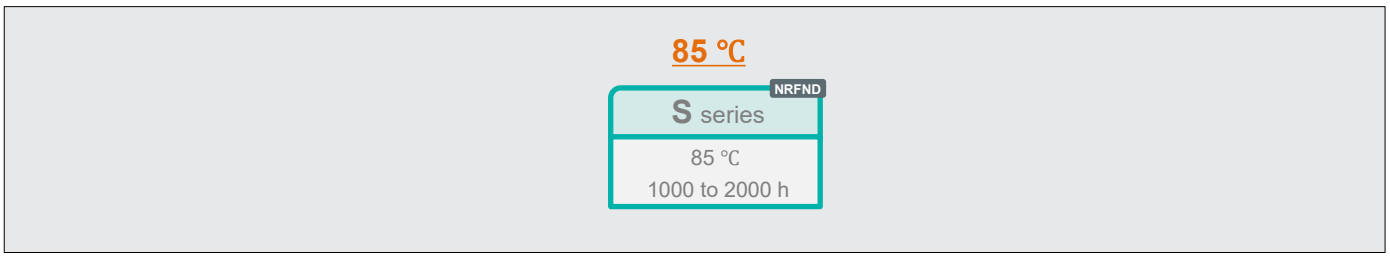

NRFND Not recommended for new design

Explanation of part numbers

◇ Part number system

・Standard

EEE	FK	1 E	101	X	P
Product classification 3 figures	Series 2 figures	Voltage code 1 to 2 figures	Capacitance code 3 figures	Size / Special code 0 to 2 figures (Two codes can be combined.)	Taping / Option code 1 figure

・FK, TG series with øD ≧ 12.5mm

EEV

Series	Code
HA (105 ℃ 1000 h)	HA
HB (105 ℃ 2000 h)	HB
	HB*1
HC (105 ℃ 3000 to 5000 h)	HC
HD (105 ℃ 5000 h)	HD
FC (105 ℃ 1000 h)	FC
FK (105 ℃ 2000 to 5000 h)	FK
FKS (105 ℃ 2000 to 5000 h)	FK
FN (105 ℃ 2000 h)	FN
FT (105 ℃ 2000 to 5000 h)	FT
FP (105 ℃ 2000 h)	FP
FH (105 ℃ 7000 to 10000 h)	FH
TG (125 ℃ 1000 to 2000 h)	TG
TK (125 ℃ 2000 to 3000 h)	TK
TP (125 ℃ 2000 to 3000 h)	TP
TC (125 ℃ 2000 to 3000 h)	TC
TCU (125 ℃ 3000 h)	TC
TQ (125 ℃ 2000 h)	TQ

Rated voltage (V)	Code
4	0G
6.3	0J*2(J)
10	1A*1(A)
16	1C*2(C)
25	1E*2(E)
35	1V*2(V)
50	1H*2(H)
63	1J
80	1K*2(K)
100	2A
160	2C
200	2D
250	2E
350	2V
400	2G
450	2W

Cap. (μF)	Code
1	10
2.2	2R2
3.3	3R3
4.7	4R7
6.8	6R8
10	100
18	180
22	220
27	270
33	330
39	390
47	470
56	560
68	680
82	820
100	101
120	121
150	151
180	181
220	221
270	271
330	331
390	391
470	471
560	561
680	681
820	821
1000	102
1200	122
1500	152
1800	182
2200	222
3300	332
4700	472
6800	682
7500	752

Description	Code
High temperature reflow	A
Miniaturization	U
Size 6.3 x 7.7	X
FKS series with other sizes	S
S, HB series with 5.4 L	
S, HA series with miniaturization	W
S series with bipolar	N
FK, FT series with 5000h life	G
Others	No code

øD x L (mm)	Code
4, 5	R
6.3 to 10(x 10.2)	P
10(x 13.5) to x 12.5	Q
16, 18	M
Vibration -proof	V*3
Halogen -free	L

*1: Bi-poler
*2: If part number exceeds 12 figures, voltage code is abbreviated as follows,
0J →J, 1A→A, 1C→C, 1E→E, 1V→V, 1H→H
*3: Size øD＝6.3 mm and larger

・S series

EEE	1H	A	100	A	P
	Voltage code 2 figures	Series 1 figures	Capacitance code 3 figures	Size code 0 to 2 figures	Taping code 1 figure

Series	Code
S（85℃ 1000 to 2000 h)	A

Recommendable reflow soldering

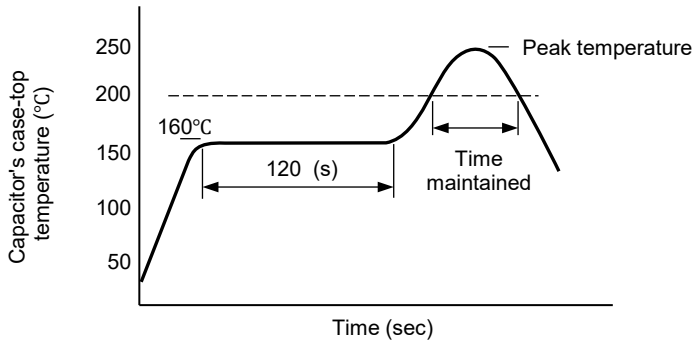

Lead-Free reflow

Reflow No.	(1)	(2)	(3)	(4)
Category	ø4 to ø6.3	ø8 to ø10	ø12.5 to ø18	N/A
Peak temperature	250 °C	235 °C	230 °C (220 °C)	
Time in peak temperature	5 s	5 s	5 s (5 s)	
Time maintained	≥200 °C 60 s	≥200 °C 60 s	≥200 °C 20 s (30 s)	
Reflow cycles	1 time	1 time	1 time	

High temperature Lead-Free reflow

Reflow No.	(5)	(6)		(7)		(8)	
Category	ø4 to ø6.3	ø8 to ø10		ø8 to ø10		ø6.3 to ø10	
Peak temperature	260 °C (255 °C)	245 °C	260 °C	250 °C	260 °C	255 °C	260 °C
Time in peak temperature	≥250 °C 5 s (10 s)	≥240 °C 10 s	≥250 °C 5 s	≥240 °C 10 s	≥250 °C 5 s	≥250 °C 30 s	≥250 °C 20 s
Time maintained	≥230 °C 30 s	≥230 °C 30 s	≥230 °C 30 s	≥230 °C 30 s	≥230 °C 30 s	≥230 °C 40 s	≥230 °C 30 s
	≥217 °C 40 s	≥217 °C 40 s	≥217 °C 40 s	≥217 °C 40 s	≥217 °C 40 s	≥217 °C 65 s	≥217 °C 65 s
	≥200 °C 70 s	≥200 °C 70 s	≥200 °C 70 s	≥200 °C 70 s	≥200 °C 70 s	≥200 °C 90 s	≥200 °C 70 s
Reflow cycles	2 times	2 times	1 time	2 times	1 time	2 times	2 times

Reflow No.	(9)	(10)	(11)
Category	ø12.5 to ø18	ø12.5 to ø18	ø12.5 to ø18
Peak temperature	245 °C	245 °C	245 °C
Time in peak temperature	≥240 °C 30 s	≥240 °C 5 s	≥240 °C 5 s
Time maintained	≥217 °C 90 s	≥217 °C 30 s	≥217 °C 30 s
Reflow cycles	2 times	2 times	1 time

* For reflow, use a thermal condition system such as infrared radiation (IR) or hot blast.
* Reflow temperature is measured on capacitor's case top.

Dimensions (Vibration-proof products)

✻ The size and shape are different from standard products.

< Size code : D, D8 >

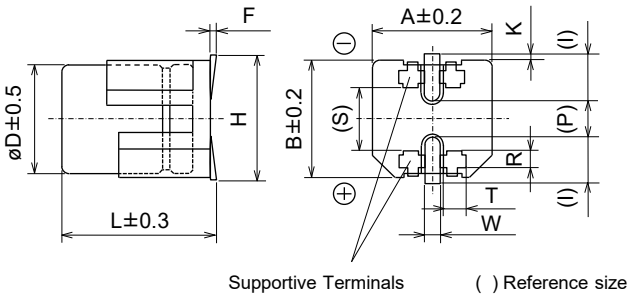

※The diagram is not drawn to scale.

< Size code : E, F, G, H13, J16, K16, K21 >

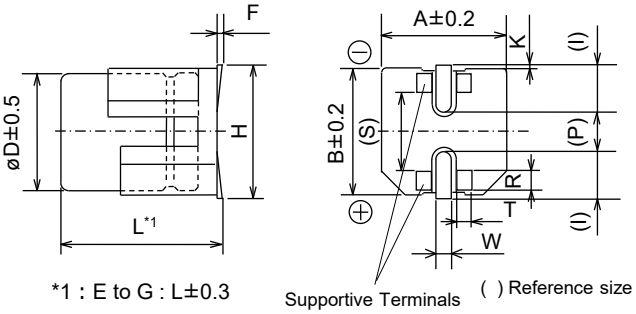

*1 : E to G : L±0.3
H13 to K21 : L±0.5

Unit : mm

Size code	øD	L	A, B	H max.	F	I	W	P	K	R	S	T
D	6.3	6.1	6.6	7.8	0 to +0.15	2.4	0.65±0.1	2.2	0.35 $^{+0.15}_{-0.20}$	1.1±0.2	3.3	1.05±0.2
D8	6.3	8.0	6.6	7.8	0 to +0.15	2.4	0.65±0.1	2.2	0.35 $^{+0.15}_{-0.20}$	1.1±0.2	3.3	1.05±0.2
E	8.0	6.5	8.3	9.5	0 to +0.15	3.4	0.7±0.1	2.2	0.35 $^{+0.15}_{-0.20}$	0.70±0.2	5.3	1.7±0.2
F	8.0	10.5	8.3	10.0	0 to +0.15	3.4	1.2±0.2	3.1	0.70±0.2	0.70±0.2	5.3	1.3±0.2
G	10.0	10.5	10.3	12.0	0 to +0.15	3.5	1.2±0.2	4.6	0.70±0.2	0.70±0.2	6.9	1.3±0.2
H13	12.5	13.8	13.5	15.0	–0.1 to +0.15	4.7	1.2±0.2	4.4	0.70±0.3	2.2±0.2	7.1	2.4±0.2
J16	16.0	16.8	17.0	19.0	–0.1 to +0.15	5.5	1.4±0.2	6.7	0.70±0.3	3.0±0.2	9.0	1.9±0.2
K16	18.0	16.8	19.0	21.0	–0.1 to +0.15	6.7	1.4±0.2	6.7	0.70±0.3	3.0±0.2	11.0	1.9±0.2
K21	18.0	21.8	19.0	21.0	–0.1 to +0.15	6.7	1.4±0.2	6.7	0.70±0.3	3.0±0.2	11.0	1.9±0.2

Land / Pad pattern

The circuit board land/pad pattern size for chip capacitors is specified in the following table.
The land pitch influences installation strength.

● Standard products

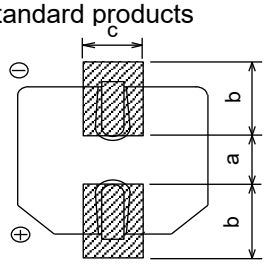

Land space

(Table of board land size vs. capacitor size) Unit : mm

Size code	a	b	c
B (ø4)	1.0	2.5	1.6
C (ø5)	1.5	2.8	1.6
D (ø6.3)	1.8	3.2	1.6
D8 (ø6.3x7.7L)	1.8	3.2	1.6
E (ø8x6.2L)	2.2	4.0	1.6
F (ø8x10.2L)	3.1	4.0	2.0
G (ø10x10.2L)	4.6	4.1	2.0
H13 (ø12.5)	3.9	6.2	2.0
J16 (ø16)	6.0	6.9	2.5
K16, K21 (ø18)	6.0	7.9	2.5

Larger dimension of "a" may prevent back fillet from being formed adequately to obtain required solder strength.

● Vibration-proof products

< Size code : D, D8 >

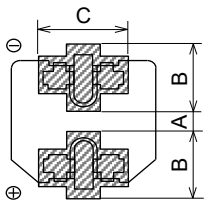

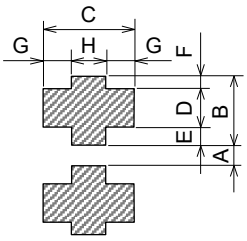

(Table of board land size vs. capacitor size) Unit : mm

Size code	A	B	C	D	E	F	G	H
D (ø6.3xL6.1)	1.2	3.6	3.2	2.0	0.95	0.65	1.0	1.2
D8 (ø6.3xL8.0)	1.2	3.6	3.2	2.0	0.95	0.65	1.0	1.2
E (ø8x6.5L)	1.8	4.2	5.0	1.3	1.5	1.4	1.5	2.0
F (ø8x10.5L)	2.7	4.0	4.7	1.3	1.0	1.7	1.1	2.5
G (ø10)	3.9	4.4	4.7	1.3	1.2	1.9	1.1	2.5
H13 (ø12.5)	3.9	6.2	6.9	2.8	1.3	2.1	2.2	2.5
J16 (ø16)	5.8	7.0	6.2	3.6	1.3	2.1	1.7	2.8
K16, K21 (ø18)	5.8	8.0	6.2	3.6	2.3	2.1	1.7	2.8

Larger dimension of "a" may prevent back fillet from being formed adequately to obtain required solder strength.

< Size code : E, F, G, H, J, K >

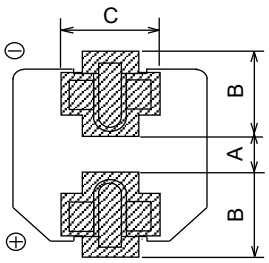

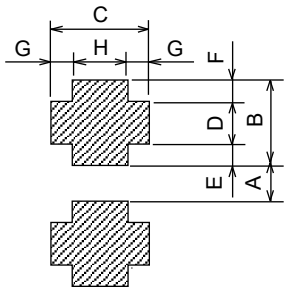

∗ Follow your design rules for mounting conditions, solderability, and fitting strength if some exists in order to determine the land pattern.

∗ The vibration-proof capacitors of size ø6.3 has support terminals extending from the bottom side to the lead edge. Then, make sure to find appropriate soldering conditions to form fillet on the support terminals if required for appearance inspection.

Packaging specifications

● Reel dimensions

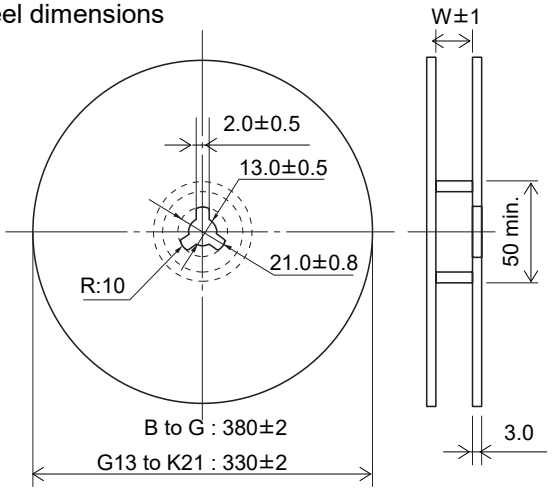

Unit : mm

Size code	W
B, C	14.0
D, E, D8	18.0
F, G	26.0

Size code	W
H13	34.0
J16, K16, K21	46.0

● Dimensions of outer carton box

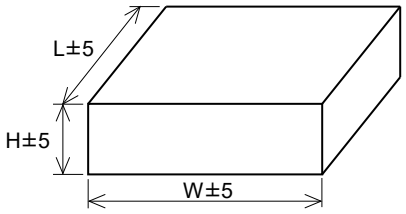

Unit : mm

Size code	H	W	L
B, C	180	395	395
D, D8, E	220	395	395
F, G	180	395	395
H13	210	345	355
J16, K16, K21	210	345	355

● Taping dimensions (size B to G)

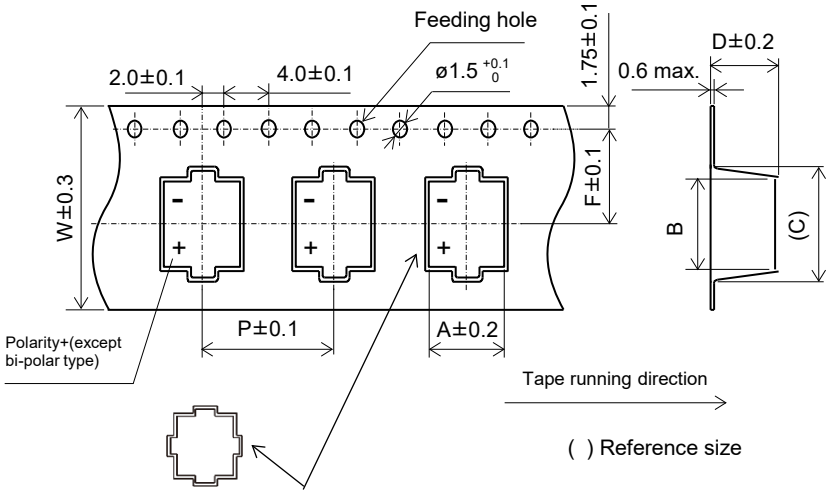

※ The pocket shape has two types depending on the size code.

● Min.packing quantity

Size code	Height	Min.packing quantity pcs. 380 mm reel
B	L=5.4 mm	2000
	L=5.8 mm	2000
C, D	L=5.4 mm	1000
	L=5.8 mm	1000
E	–	1000
D8	–	900
F, G	–	500

Size code	Min.packing quantity pcs. 330 mm reel
H13	200
J16, K16	125
K21	75

Unit : mm

Size code	W	A	B	C	P	F	D Height L=5.4 mm	D Height L=5.8 mm
B	12.0	4.7	4.6 $^{+0.2}_{-0.1}$	6.5	8.0	5.5	5.8	6.2
C	12.0	5.7	5.7 $^{+0.3}_{-0.2}$	8.0	12.0	5.5	5.8	6.4
D	16.0	7.0	7.0 $^{+0.3}_{-0.2}$	9.0	12.0	7.5	5.8	6.4
D8	16.0	7.0	7.0 $^{+0.3}_{-0.2}$	9.0	12.0	7.5	8.4	
E	16.0	8.7	8.7 $^{+0.3}_{-0.2}$	11.4	12.0	7.5	6.8	
F	24.0	8.7	8.7 $^{+0.3}_{-0.2}$	12.5	16.0	11.5	11.0	
G	24.0	10.7	10.7 $^{+0.3}_{-0.2}$	14.5	16.0	11.5	11.0	

Packaging specifications

● Taping dimensions (size H13 to K21)

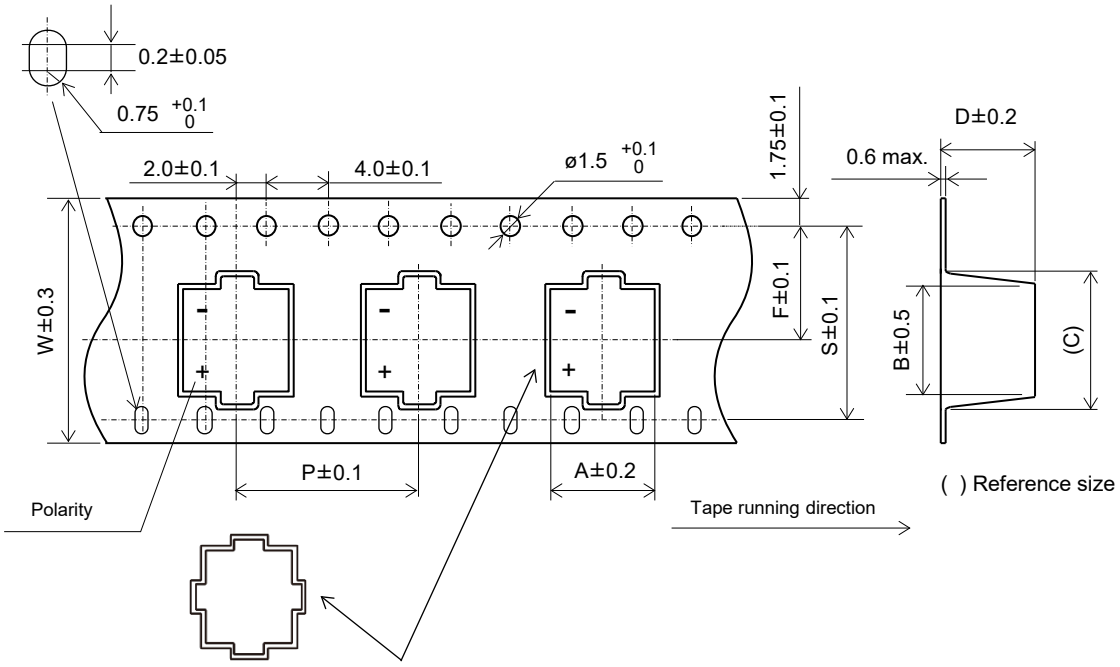

※ The pocket shape has two types depending on the size code.

Unit : mm

Size code	Taping size							
	A	B	C	D	F	P	S	W
H13	14.0	14.0	18.0	14.5	14.2	24.0	28.4	32.0
J16	17.5	17.5	23.0	17.5	20.2	28.0	40.4	44.0
K16	19.5	19.5	26.0	17.5	20.2	32.0	40.4	44.0
K21	19.5	19.5	26.0	22.5	20.2	32.0	40.4	44.0

Panasonic
INDUSTRY

⚠ This series is not a recommended product.
Not recommended for new design.

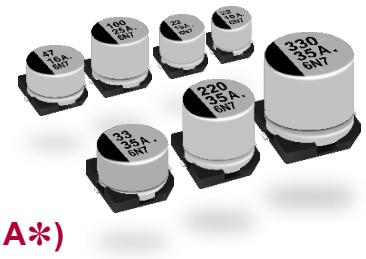

Aluminum Electrolytic Capacitors

Surface Mount Type

S series **High temperature Lead-Free reflow (suffix : A∗)**

Features

- Endurance : 85 °C 2000 h
- Vibration-proof product (30G guaranteed) is available upon request. (ø8 ≤)
- AEC-Q200 compliant
- RoHS compliant

Specifications

Category temp. range	–40 °C to +85 °C							
Rated voltage range	6.3 V to 50 V							
Capacitance range	1 µF to 1500 µF							
Capacitance tolerance	±20 % (120 Hz / +20 °C)							
Leakage current	I ≤ 0.01 CV or 3 (µA), whichever is greater, 2 minutes after reaching rated voltage, 20 °C *CV = (Capacitance in µF) x (Rated voltage in V)							
Dissipation factor (tan δ)	Please see the attached characteristics list							
Characteristics at low temperature	Rated voltage (V)	6.3	10	16	25	35	50	(Impedance ratio at 120 Hz)
	Z (-25 °C) / Z (+20 °C)	4	3	2	2	2	2	
	Z (-40 °C) / Z (+20 °C)	8	6	4	4	3	3	
Endurance	After applying rated working voltage for 2000 h (Bi-polar:1000 h for each polarity) at +85 °C ± 2 °C and then being stabilized at +20 °C, capacitors shall meet the following limits.							
	Capacitance change	Within ±20 % of the initial value						
		Size code	Capacitance change					
		D8 (ø6.3)	2000 hours ±25 %					
		≤ D (ø6.3) Miniature	1000 hours ±30 %					
	Dissipation factor (tan δ)	≤ 200 % of the initial limit						
	Leakage current	Within the initial limit						
Shelf life	After storage for 1000 h at +85 °C ± 2 °C with no voltage applied and then being stabilized at +20 °C, capacitors shall meet the limits specified in endurance. (Capacitors are left at room temperature and humidity for 2 hours after the test. Then, apply the rated voltage for 30min with a series protection resistance of 1000 Ω ± 10 Ω. Measure electrical characteristics after discharging the capacitor.)							
Resistance to soldering heat	After reflow soldering and then being stabilized at +20 °C, capacitors shall meet the following limits.							
	Capacitance change	Within ±10 % of the initial value						
	Dissipation factor (tan δ)	Within the initial limit						
	Leakage current	Within the initial limit						

Frequency correction factor for ripple current

Frequency（Hz）	50, 60	120	1 k	10 k to
Correction factor	0.70	1.00	1.30	1.70

Marking

Example : 6.3 V 22 µF
Marking color : BLACK

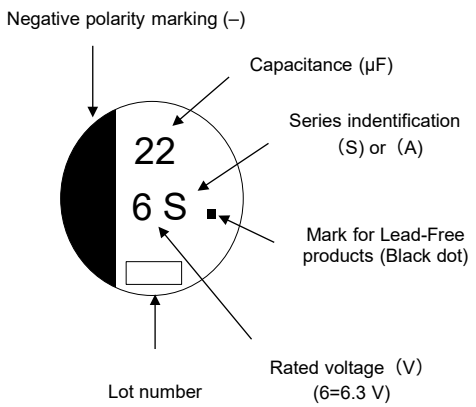

Dimensions

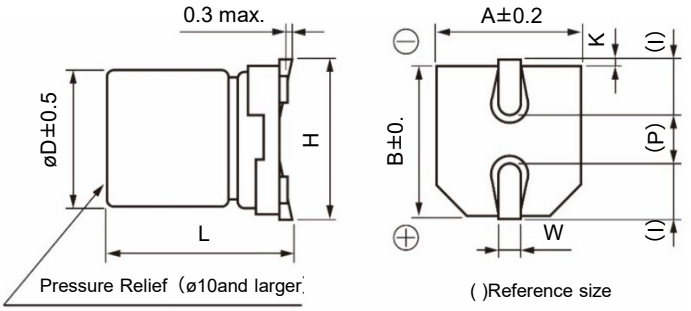

Unit : mm

Size code	øD	L	A、B	H	I	W	P	K
B	4.0	5.4 +0.1 -0.2	4.3	5.5 max.	1.8	0.65±0.1	1.0	0.35 +0.15 -0.20
C	5.0	5.4 +0.1 -0.2	5.3	6.5 max.	2.2	0.65±0.1	1.5	0.35 +0.15 -0.20
D	6.3	5.4 +0.1 -0.2	6.6	7.8 max.	2.6	0.65±0.1	1.8	0.35 +0.15 -0.20
D 8	6.3	7.7±0.3	6.6	7.8 max.	2.6	0.65±0.1	1.8	0.35 +0.15 -0.20
E	8.0	6.2±0.3	8.3	9.5 max.	3.4	0.65±0.1	2.2	0.35 +0.15 -0.20
F	8.0	10.2±0.3	8.3	10.0 max.	3.4	0.90±0.2	3.1	0.70±0.2
G	10.0	10.2±0.3	10.3	12.0 max.	3.5	0.90±0.2	4.6	0.70±0.2

・The dimensions of the vibration-proof products, please refer to the page of the mounting specification.

Design and specifications are each subject to change without notice. Ask factory for the current technical specifications before purchase and/or use.
Should a safety concern arise regarding this product, please be sure to contact us immediately.

Explanation of part numbers

◇ Part number system

e.g.: EEE0JA331XAP

EEE	0J	A	331	XA	P
Product classification	Rated voltage (V) / Code	Series / Code	Capacitance (μF) / Code	Special code / Code	Tape width (mm) / Code

Rated voltage (V)	Code
6.3	0J
10	1A
16	1C
25	1E
35	1V
50	1H

Series	Code
S	A

Capacitance (μF)	Code	Capacitance (μF)	Code
1	10	47	470
2.2	2R2	100	101
3.3	3R3	220	221
4.7	4R7	330	331
10	100	470	471
22	220	1000	102
33	330	1500	152

Special code	Code
High-temperature lead-free reflow	A
Minia-turized product	U, W
D8 size	X

(Two codes can be combined.)

Tape width (mm)	Code
12	R
16, 24	P

Characteristics list

Rated voltage (V)	Capacitance (±20 %) (μF)	Case size (mm) øD	Case size (mm) L	Size code*1	Specification: Ripple current*2 (mA rms)	Specification: tanδ*3	Specification: Endurance (hours)	Part No.	Reflow	Min. Packaging Q'ty (pcs) Taping
6.3	22	4.0	5.4	B	29	0.30	2000	EEE0JA220AR	(5)	2000
	33	4.0	5.4	(B)	22	0.35	1000	EEE0JA330WAR	(5)	2000
	47	5.0	5.4	C	46	0.30	2000	EEE0JA470AR	(5)	1000
	100	5.0	5.4	(C)	47	0.40	1000	EEE0JA101WAR	(5)	1000
		6.3	5.4	D	71	0.30	2000	EEE0JA101AP	(5)	1000
	330	6.3	7.7	D8	188	0.30	2000	EEE0JA331XAP	(5)	900
		8.0	6.2	E	300	0.35	2000	EEE0JA331AP	(7)	1000
	470	8.0	10.2	(F)	380	0.35	1000	EEE0JA471UAP	(7)	500
	1000	10.0	10.2	G	700	0.35	2000	EEE0JA102AP	(7)	500
	1500	10.0	10.2	(G)	750	0.50	1000	EEE0JA152UAP	(7)	500
10	22	4.0	5.4	(B)	28	0.30	1000	EEE1AA220WAR	(5)	2000
	33	4.0	5.4	(B)	29	0.30	1000	EEE1AA330WAR	(5)	2000
		5.0	5.4	C	43	0.22	2000	EEE1AA330AR	(5)	1000
	47	5.0	5.4	(C)	47	0.30	1000	EEE1AA470WAR	(5)	1000
	100	5.0	5.4	(C)	50	0.30	1000	EEE1AA101WAR	(5)	1000
		6.3	5.4	D	70	0.26	2000	EEE1AA101AP	(5)	1000
	220	6.3	7.7	D8	173	0.22	2000	EEE1AA221XAP	(5)	900
		8.0	6.2	E	250	0.26	2000	EEE1AA221AP	(7)	1000
	330	8.0	10.2	F	390	0.26	2000	EEE1AA331AP	(7)	500
	470	8.0	10.2	(F)	390	0.26	1000	EEE1AA471UAP	(7)	500
		10.0	10.2	G	400	0.26	2000	EEE1AA471AP	(7)	500
	1000	10.0	10.2	(G)	580	0.35	1000	EEE1AA102UAP	(7)	500
16	10	4.0	5.4	B	28	0.16	2000	EEE1CA100AR	(5)	2000
	22	4.0	5.4	(B)	28	0.26	1000	EEE1CA220WAR	(5)	2000
		5.0	5.4	C	39	0.16	2000	EEE1CA220AR	(5)	1000
	33	5.0	5.4	(C)	35	0.26	1000	EEE1CA330WAR	(5)	1000
	47	5.0	5.4	(C)	39	0.26	1000	EEE1CA470WAR	(5)	1000
		6.3	5.4	D	70	0.16	2000	EEE1CA470AP	(5)	1000
	100	6.3	5.4	(D)	70	0.26	1000	EEE1CA101WAP	(5)	1000
		8.0	6.2	E	200	0.20	2000	EEE1CA101AP	(7)	1000
	220	6.3	7.7	D8	162	0.20	2000	EEE1CA221XAP	(5)	900
		8.0	10.2	(F)	280	0.20	1000	EEE1CA221UAP	(7)	500
	330	8.0	10.2	(F)	320	0.20	1000	EEE1CA331UAP	(7)	500
		10.0	10.2	G	380	0.20	2000	EEE1CA331AP	(7)	500
	470	8.0	10.2	(F)	350	0.26	1000	EEE1CA471UAP	(7)	500
		10.0	10.2	G	420	0.20	2000	EEE1CA471AP	(7)	500

*1: Size code( ) : Miniaturization product *2: Ripple current (120 Hz / +85 °C) *3: tanδ (120 Hz / +20 °C)

・Please refer to the page of “Refl ow Profi le” and “The Taping Dimensions”.

・When requesting vibration-proof product, please put the last “V” instead to “P”

Design and specifications are each subject to change without notice. Ask factory for the current technical specifications before purchase and/or use.
Should a safety concern arise regarding this product, please be sure to contact us immediately.

Characteristics list

Rated voltage (V)	Capacitance (±20 %) (μF)	Case size (mm) øD	Case size (mm) L	Size code*1	Specification Ripple current*2 (mA rms)	Specification tanδ*3	Specification Endurance (hours)	Part No.	Reflow	Min. Packaging Q'ty (pcs) Taping
25	4.7	4.0	5.4	B	22	0.14	2000	EEE1EA4R7AR	(5)	2000
	10	4.0	5.4	(B)	22	0.20	1000	EEE1EA100WAR	(5)	2000
		5.0	5.4	C	28	0.14	2000	EEE1EA100AR	(5)	1000
	22	5.0	5.4	(C)	35	0.20	1000	EEE1EA220WAR	(5)	1000
		6.3	5.4	D	55	0.14	2000	EEE1EA220AP	(5)	1000
	33	5.0	5.4	(C)	42	0.20	1000	EEE1EA330WAR	(5)	1000
		6.3	5.4	D	65	0.14	2000	EEE1EA330AP	(5)	1000
	47	6.3	5.4	(D)	70	0.20	1000	EEE1EA470WAP	(5)	1000
	100	8.0	6.2	(E)	91	0.16	1000	EEE1EA101UAP	(7)	1000
		6.3	7.7	D8	143	0.16	2000	EEE1EA101XAP	(5)	900
		8.0	10.2	F	180	0.16	2000	EEE1EA101AP	(7)	500
	220	8.0	10.2	(F)	230	0.20	1000	EEE1EA221UAP	(7)	500
		10.0	10.2	G	310	0.16	2000	EEE1EA221AP	(7)	500
	330	8.0	10.2	(F)	270	0.20	1000	EEE1EA331UAP	(7)	500
		10.0	10.2	G	340	0.16	2000	EEE1EA331AP	(7)	500
	470	10.0	10.2	(G)	380	0.25	1000	EEE1EA471UAP	(7)	500
35	4.7	4.0	5.4	B	22	0.12	2000	EEE1VA4R7AR	(5)	2000
	10	4.0	5.4	(B)	22	0.16	1000	EEE1VA100WAR	(5)	2000
		5.0	5.4	C	30	0.12	2000	EEE1VA100AR	(5)	1000
	22	5.0	5.4	(C)	36	0.16	1000	EEE1VA220WAR	(5)	1000
		6.3	5.4	D	60	0.12	2000	EEE1VA220AP	(5)	1000
	33	6.3	5.4	(D)	60	0.16	1000	EEE1VA330WAP	(5)	1000
		8.0	6.2	E	130	0.14	2000	EEE1VA330AP	(7)	1000
	47	6.3	5.4	(D)	70	0.16	1000	EEE1VA470WAP	(5)	1000
		8.0	6.2	E	165	0.14	2000	EEE1VA470AP	(7)	1000
	100	6.3	7.7	D8	132	0.14	2000	EEE1VA101XAP	(5)	900
		8.0	10.2	(F)	140	0.14	1000	EEE1VA101UAP	(7)	500
		10.0	10.2	G	210	0.14	2000	EEE1VA101AP	(7)	500
	220	8.0	10.2	(F)	200	0.14	1000	EEE1VA221UAP	(7)	500
		10.0	10.2	G	310	0.14	2000	EEE1VA221AP	(7)	500
	330	10.0	10.2	(G)	350	0.30	1000	EEE1VA331UAP	(7)	500
50	1	4.0	5.4	B	10	0.12	2000	EEE1HA1R0AR	(5)	2000
	2.2	4.0	5.4	B	16	0.12	2000	EEE1HA2R2AR	(5)	2000
	3.3	4.0	5.4	B	16	0.12	2000	EEE1HA3R3AR	(5)	2000
	4.7	4.0	5.4	(B)	18	0.14	1000	EEE1HA4R7WAR	(5)	2000
		5.0	5.4	C	23	0.12	2000	EEE1HA4R7AR	(5)	1000
	10	5.0	5.4	(C)	27	0.14	1000	EEE1HA100WAR	(5)	1000
		6.3	5.4	D	35	0.12	2000	EEE1HA100AP	(5)	1000
	22	6.3	5.4	(D)	40	0.14	1000	EEE1HA220WAP	(5)	1000
		8.0	6.2	E	120	0.12	2000	EEE1HA220AP	(7)	1000
	33	8.0	6.2	(E)	65	0.12	1000	EEE1HA330UAP	(7)	1000
		6.3	7.7	D8	65	0.14	2000	EEE1HA330XAP	(5)	900
		8.0	10.2	F	110	0.12	2000	EEE1HA330AP	(7)	500
	47	6.3	7.7	D8	105	0.14	2000	EEE1HA470XAP	(5)	900
		8.0	10.2	(F)	110	0.12	1000	EEE1HA470UAP	(7)	500
		10.0	10.2	G	130	0.12	2000	EEE1HA470AP	(7)	500
	100	8.0	10.2	(F)	200	0.18	1000	EEE1HA101UAP	(7)	500
		10.0	10.2	G	250	0.12	2000	EEE1HA101AP	(7)	500
	220	10.0	10.2	(G)	300	0.18	1000	EEE1HA221UAP	(7)	500

*1: Size code( ) : Miniaturization product
*2: Ripple current (120 Hz / +85 °C)
*3: tanδ (120 Hz / +20 °C)
・Please refer to the page of “Refl ow Profi le” and “The Taping Dimensions”.
・When requesting vibration-proof product, please put the last “V” instead to “P”

Design and specifications are each subject to change without notice. Ask factory for the current technical specifications before purchase and/or use.
Should a safety concern arise regarding this product, please be sure to contact us immediately.

Panasonic
INDUSTRY

This series is not a recommended product.
Not recommended for new design.

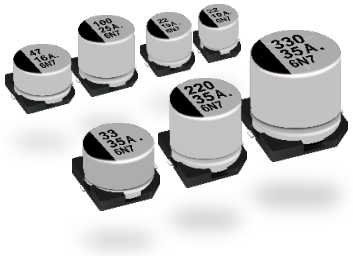

Aluminum Electrolytic Capacitors

Surface Mount Type

S series

Features

- Endurance : 85 °C 2000 h
- Vibration-proof product (30G guaranteed) is available upon request. (ø8 ≤)
- AEC-Q200 compliant
- RoHS compliant

Specifications

Category temp. range	–40 °C to +85 °C											
Rated voltage range	4.0 V to 100 V											
Capacitance range	1 µF to 1500 µF											
Capacitance tolerance	±20 % (120 Hz / +20 °C)											
Leakage current	I ≤ 0.01 CV or 3 (µA), whichever is greater, 2 minutes after reaching rated voltage, 20 °C *CV = (Capacitance in µF) x (Rated voltage in V)											
Dissipation factor (tan δ)	Please see the attached characteristics list											
Characteristics at low temperature	Rated voltage (V)	4.0	6.3	10	16	25	35	50	63	100	(Impedance ratio at 120 Hz)	
	Z (-25 °C) / Z (+20 °C)	7	4	3	2	2	2	2	3	3		
	Z (-40 °C) / Z (+20 °C)	15	8	6	4	4	3	3	4	4		
Endurance	After applying rated working voltage for 2000 h (Bi-polar:1000 h for each polarity) at +85 °C ± 2 °C and then being stabilized at +20 °C, capacitors shall meet the following limits.											
	Capacitance change	Within ±20 % of the initial value										
		Size code			Rated voltage			Capacitance change				
		B(ø4) to D, D8(ø6.3)			4 V			1000 hours ±30 %				
		≤ D(ø6.3) Miniature			6.3 V							
					≧ 10 V			1000 hours ±20 %				
	Dissipation factor (tan δ)	≤ 200 % of the initial limit										
	Leakage current	Within the initial limit										
Shelf life	After storage for 1000 h at +85 °C ± 2 °C with no voltage applied and then being stabilized at +20 °C, capacitors shall meet the limits specified in endurance. (Capacitors are left at room temperature and humidity for 2 hours after the test. Then, apply the rated voltage for 30min with a series protection resistance of 1000 Ω ± 10 Ω. Measure electrical characteristics after discharging the capacitor.)											
Resistance to soldering heat	After reflow soldering and then being stabilized at +20 °C, capacitors shall meet the following limits.											
	Capacitance change	Within ±10 % of the initial value										
	Dissipation factor (tan δ)	Within the initial limit										
	Leakage current	Within the initial limit										

Frequency correction factor for ripple current

Frequency（Hz）	50, 60	120	1 k	10 k to
Correction factor	0.70	1.00	1.30	1.70

Marking

Example : 4 V 33 µF
Marking color : BLACK

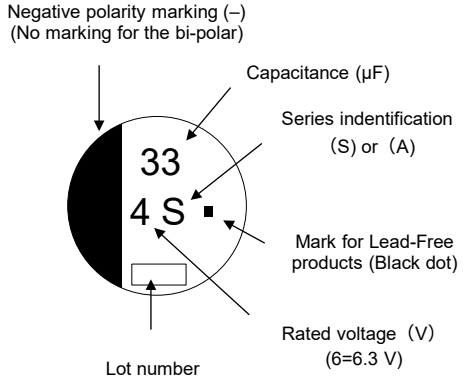

Dimensions

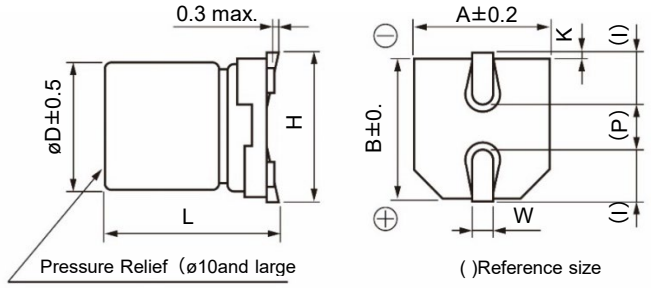

Unit : mm

Size code	øD	L	A, B	H	I	W	P	K
B	4.0	5.4 +0.1 -0.2	4.3	5.5 max.	1.8	0.65±0.1	1.0	0.35 +0.15 -0.20
C	5.0	5.4 +0.1 -0.2	5.3	6.5 max.	2.2	0.65±0.1	1.5	0.35 +0.15 -0.20
D	6.3	5.4 +0.1 -0.2	6.6	7.8 max.	2.6	0.65±0.1	1.8	0.35 +0.15 -0.20
D 8	6.3	7.7±0.3	6.6	7.8 max.	2.6	0.65±0.1	1.8	0.35 +0.15 -0.20
E	8.0	6.2±0.3	8.3	9.5 max.	3.4	0.65±0.1	2.2	0.35 +0.15 -0.20
F	8.0	10.2±0.3	8.3	10.0 max.	3.4	0.90±0.2	3.1	0.70±0.2
G	10.0	10.2±0.3	10.3	12.0 max.	3.5	0.90±0.2	4.6	0.70±0.2

Design and specifications are each subject to change without notice. Ask factory for the current technical specifications before purchase and/or use.
Should a safety concern arise regarding this product, please be sure to contact us immediately.

Explanation of part numbers

◇ Part number system

e.g.: EEE0GA330SR

EEE	0G	A	330	S	R
Product classification	Rated voltage (V) / Code	Series / Code	Capacitance (μF) / Code	Special code / Code	Tape width (mm) / Code

Rated voltage (V)	Code
4	0G
6.3	0J
10	1A
16	1C
25	1E
35	1V
50	1H
63	1J
100	2A

Series	Code
S	A

Capacitance (μF)	Code	Capacitance (μF)	Code
1	10	47	470
2.2	2R2	100	101
3.3	3R3	220	221
4.7	4R7	330	331
10	100	470	471
22	220	1000	102
33	330	1500	152

Special code	Code
Miniaturized product	U, W
D8 size	X
Downsize to D8 size	Y
L=5.4	S
Bipolar	N
Others	-

(Two codes can be combined)

Tape width (mm)	Code
12	R
16, 24	P

Characteristics list

Rated voltage (V)	Capacitance (±20 %) (μF)	Case size (mm) øD	Case size (mm) L	Size code*1	Specification: Ripple current*2 (mA rms)	Specification: tanδ*3	Specification: Endurance (hours)	Part No.	Reflow	Min. Packaging Q'ty (pcs) Taping
4	33	4.0	5.4	B	26	0.35	1000	EEE0GA330SR	(1)	2000
	47	4.0	5.4	B	34	0.35	1000	EEE0GA470SR	(1)	2000
	100	5.0	5.4	C	61	0.35	1000	EEE0GA101SR	(1)	1000
	220	6.3	5.4	D	82	0.35	1000	EEE0GA221SP	(1)	1000
	330	6.3	5.4	(D)	80	0.50	1000	EEE0GA331WP	(1)	1000
	470	6.3	7.7	D8	200	0.35	1000	EEE0GA471XP	(1)	900
6.3	22	4.0	5.4	B	29	0.26	2000	EEE0JA220SR	(1)	2000
	33	4.0	5.4	(B)	22	0.35	1000	EEE0JA330WR	(1)	2000
	47	4.0	5.4	(B)	36	0.35	1000	EEE0JA470WR	(1)	2000
		5.0	5.4	C	46	0.26	2000	EEE0JA470SR	(1)	1000
	100	5.0	5.4	(C)	47	0.35	1000	EEE0JA101WR	(1)	1000
		6.3	5.4	D	71	0.26	2000	EEE0JA101SP	(1)	1000
	220	6.3	5.4	(D)	74	0.35	1000	EEE0JA221WP	(1)	1000
	330	6.3	7.7	D8	188	0.26	2000	EEE0JA331XP	(1)	900
		8.0	6.2	E	300	0.35	2000	EEE0JA331P	(2)	1000
	470	8.0	10.2	F	380	0.35	2000	EEE0JA471P	(2)	500
	1000	8.0	10.2	(F)	500	0.35	2000	EEE0JA102UP	(2)	500
		10.0	10.2	G	700	0.35	2000	EEE0JA102P	(2)	500
	1500	10.0	10.2	G	750	0.35	2000	EEE0JA152P	(2)	500
10	22	4.0	5.4	(B)	28	0.30	1000	EEE1AA220WR	(1)	2000
	33	4.0	5.4	(B)	29	0.30	1000	EEE1AA330WR	(1)	2000
		5.0	5.4	C	43	0.20	2000	EEE1AA330SR	(1)	1000
	47	5.0	5.4	(C)	43	0.30	1000	EEE1AA470WR	(1)	1000
	100	5.0	5.4	(C)	50	0.30	1000	EEE1AA101WR	(1)	1000
		6.3	5.4	D	70	0.26	2000	EEE1AA101SP	(1)	1000
	220	6.3	7.7	D8	173	0.20	2000	EEE1AA221XP	(1)	900
		8.0	6.2	E	250	0.26	2000	EEE1AA221P	(2)	1000
	330	8.0	10.2	F	390	0.26	2000	EEE1AA331P	(2)	500
	470	8.0	10.2	(F)	390	0.26	2000	EEE1AA471UP	(2)	500
		10.0	10.2	G	400	0.26	2000	EEE1AA471P	(2)	500
	1000	10.0	10.2	G	580	0.26	2000	EEE1AA102P	(2)	500

*1: Size code( ) : Miniaturization product *2: Ripple current (120 Hz / +85 °C) *3: tanδ (120 Hz / +20 °C)

・Please refer to the page of “Refl ow Profi le” and “The Taping Dimensions”.

・When requesting vibration-proof product, please put the last “V” instead to “P”

Design and specifications are each subject to change without notice. Ask factory for the current technical specifications before purchase and/or use.
Should a safety concern arise regarding this product, please be sure to contact us immediately.

Characteristics list

Rated voltage (V)	Capacitance (±20 %) (μF)	Case size (mm) øD	Case size (mm) L	Size code*1	Specification Ripple current*2 (mA rms)	Specification tanδ*3	Specification Endurance (hours)	Part No.	Reflow	Min. Packaging Q'ty (pcs) Taping
16	10	4.0	5.4	B	28	0.16	2000	EEE1CA100SR	(1)	2000
	22	4.0	5.4	(B)	28	0.26	1000	EEE1CA220WR	(1)	2000
		5.0	5.4	C	39	0.16	2000	EEE1CA220SR	(1)	1000
	33	5.0	5.4	(C)	35	0.26	1000	EEE1CA330WR	(1)	1000
	47	5.0	5.4	(C)	39	0.26	1000	EEE1CA470WR	(1)	1000
		6.3	5.4	D	70	0.16	2000	EEE1CA470SP	(1)	1000
	100	6.3	5.4	(D)	70	0.26	1000	EEE1CA101WP	(1)	1000
		8.0	6.2	E	200	0.20	2000	EEE1CA101P	(2)	1000
	220	6.3	7.7	D8	162	0.16	2000	EEE1CA221XP	(1)	900
		8.0	6.2	E	200	0.20	2000	EEE1CA221UP	(2)	1000
		8.0	10.2	F	280	0.20	2000	EEE1CA221P	(2)	500
	330	8.0	10.2	(F)	320	0.20	2000	EEE1CA331UP	(2)	500
		10.0	10.2	G	380	0.20	2000	EEE1CA331P	(2)	500
	470	8.0	10.2	(F)	350	0.20	2000	EEE1CA471UP	(2)	500
		10.0	10.2	G	420	0.20	2000	EEE1CA471P	(2)	500
25	4.7	4.0	5.4	B	22	0.14	2000	EEE1EA4R7SR	(1)	2000
	10	4.0	5.4	(B)	22	0.20	1000	EEE1EA100WR	(1)	2000
		5.0	5.4	C	28	0.14	2000	EEE1EA100SR	(1)	1000
	22	5.0	5.4	(C)	35	0.20	1000	EEE1EA220WR	(1)	1000
		6.3	5.4	D	55	0.14	2000	EEE1EA220SP	(1)	1000
	33	5.0	5.4	(C)	42	0.20	1000	EEE1EA330WR	(1)	1000
		6.3	5.4	D	65	0.14	2000	EEE1EA330SP	(1)	1000
	47	6.3	5.4	(D)	70	0.20	1000	EEE1EA470WP	(1)	1000
	100	6.3	7.7	D8	143	0.14	2000	EEE1EA101XP	(1)	900
		8.0	6.2	(E)	91	0.16	2000	EEE1EA101UP	(2)	1000
		8.0	10.2	F	180	0.16	2000	EEE1EA101P	(2)	500
	220	8.0	10.2	(F)	230	0.16	2000	EEE1EA221UP	(2)	500
		10.0	10.2	G	310	0.16	2000	EEE1EA221P	(2)	500
	330	8.0	10.2	(F)	270	0.16	2000	EEE1EA331UP	(2)	500
		10.0	10.2	G	340	0.16	2000	EEE1EA331P	(2)	500
	470	10.0	10.2	G	380	0.16	2000	EEE1EA471P	(2)	500
35	4.7	4.0	5.4	B	22	0.12	2000	EEE1VA4R7SR	(1)	2000
	10	4.0	5.4	(B)	22	0.16	1000	EEE1VA100WR	(1)	2000
		5.0	5.4	C	30	0.12	2000	EEE1VA100SR	(1)	1000
	22	5.0	5.4	(C)	36	0.16	1000	EEE1VA220WR	(1)	1000
		6.3	5.4	D	60	0.12	2000	EEE1VA220SP	(1)	1000
	33	6.3	5.4	(D)	60	0.16	1000	EEE1VA330WP	(1)	1000
		8.0	6.2	E	130	0.14	2000	EEE1VA330P	(2)	1000
	47	6.3	5.4	(D)	70	0.16	1000	EEE1VA470WP	(1)	1000
		8.0	6.2	E	165	0.14	2000	EEE1VA470P	(2)	1000
	100	6.3	7.7	D8	132	0.12	2000	EEE1VA101XP	(1)	900
		8.0	10.2	(F)	140	0.14	2000	EEE1VA101UP	(2)	500
		10.0	10.2	G	210	0.14	2000	EEE1VA101P	(2)	500
	220	8.0	10.2	(F)	200	0.14	2000	EEE1VA221UP	(2)	500
		10.0	10.2	G	310	0.14	2000	EEE1VA221P	(2)	500
	330	10.0	10.2	G	350	0.14	2000	EEE1VA331P	(2)	500

*1: Size code( ) : Miniaturization product
*2: Ripple current (120 Hz / +85 °C)
*3: tanδ (120 Hz / +20 °C)
・Please refer to the page of “Refl ow Profi le” and “The Taping Dimensions”.
・When requesting vibration-proof product, please put the last “V” instead to “P”

Design and specifications are each subject to change without notice. Ask factory for the current technical specifications before purchase and/or use.
Should a safety concern arise regarding this product, please be sure to contact us immediately.

Characteristics list

Rated voltage (V)	Capacitance (±20 %) (μF)	Case size (mm)		Size code*1	Specification			Part No.	Reflow	Min. Packaging Q'ty (pcs)
		øD	L		Ripple current*2 (mA rms)	tanδ*3	Endurance (hours)			Taping
50	1	4.0	5.4	B	10	0.12	2000	EEE1HA010SR	(1)	2000
	2.2	4.0	5.4	B	16	0.12	2000	EEE1HA2R2SR	(1)	2000
	3.3	4.0	5.4	B	16	0.12	2000	EEE1HA3R3SR	(1)	2000
	4.7	4.0	5.4	(B)	18	0.14	1000	EEE1HA4R7WR	(1)	2000
		5.0	5.4	C	23	0.12	2000	EEE1HA4R7SR	(1)	1000
	10	5.0	5.4	(C)	27	0.14	1000	EEE1HA100WR	(1)	1000
		6.3	5.4	D	35	0.12	2000	EEE1HA100SP	(1)	1000
	22	6.3	5.4	(D)	40	0.14	1000	EEE1HA220WP	(1)	1000
		8.0	6.2	E	120	0.12	2000	EEE1HA220P	(2)	1000
	33	6.3	7.7	D8	85	0.12	2000	EEE1HA330XP	(1)	900
		8.0	6.2	(E)	65	0.12	2000	EEE1HA330UP	(2)	1000
		8.0	10.2	F	110	0.12	2000	EEE1HA330P	(2)	500
	47	6.3	7.7	D8	105	0.12	2000	EEE1HA470XP	(1)	900
		8.0	10.2	(F)	110	0.12	2000	EEE1HA470UP	(2)	500
		10.0	10.2	G	130	0.12	2000	EEE1HA470P	(2)	500
	100	8.0	10.2	(F)	200	0.12	2000	EEE1HA101UP	(2)	500
		10.0	10.2	G	250	0.12	2000	EEE1HA101P	(2)	500
	220	10.0	10.2	G	300	0.12	2000	EEE1HA221P	(2)	500
63	22	8.0	6.2	(E)	40	0.18	2000	EEE1JA220UP	(2)	1000
		8.0	10.2	F	40	0.18	2000	EEE1JA220P	(2)	500
	33	8.0	10.2	F	45	0.18	2000	EEE1JA330P	(2)	500
	47	8.0	10.2	(F)	45	0.18	2000	EEE1JA470UP	(2)	500
		10.0	10.2	G	45	0.18	2000	EEE1JA470P	(2)	500
	100	10.0	10.2	G	60	0.18	2000	EEE1JA101P	(2)	500
100	4.7	8.0	6.2	(E)	50	0.18	2000	EEE2AA4R7UP	(2)	1000
	10	8.0	6.2	(E)	50	0.18	2000	EEE2AA100UP	(2)	1000
		8.0	10.2	F	85	0.18	2000	EEE2AA100P	(2)	500
	22	8.0	10.2	(F)	55	0.18	2000	EEE2AA220UP	(2)	500
		10.0	10.2	G	85	0.18	2000	EEE2AA220P	(2)	500
	33	10.0	10.2	G	90	0.18	2000	EEE2AA330P	(2)	500

*1: Size code( ) : Miniaturization product
*2: Ripple current (120 Hz / +85 ℃)
*3: tanδ (120 Hz / +20 ℃)
・Please refer to the page of “Refl ow Profi le” and “The Taping Dimensions”.
・When requesting vibration-proof product, please put the last “V” instead to “P”

Characteristics list (Bi-polar)

Endurance : 85 ℃ 2000 h

Rated voltage (V)	Capacitance (±20 %) (μF)	Case size (mm)		Size code	Specification		Part No.	Reflow	Min. Packaging Q'ty (pcs)
		øD	L		Ripple current*1 (mA rms)	tan δ*2			Taping
6.3	22	5.0	5.4	C	29	0.52	EEE0JA220NR	(1)	1000
	47	6.3	5.4	D	46	0.52	EEE0JA470NP	(1)	1000
10	10	4.0	5.4	B	25	0.40	EEE1AA100NR	(1)	2000
	33	6.3	5.4	D	43	0.40	EEE1AA330NP	(1)	1000
16	4.7	4.0	5.4	B	20	0.32	EEE1CA4R7NR	(1)	2000
	10	5.0	5.4	C	25	0.32	EEE1CA100NR	(1)	1000
	22	6.3	5.4	D	39	0.32	EEE1CA220NP	(1)	1000
25	3.3	4.0	5.4	B	12	0.28	EEE1EA3R3NR	(1)	2000
	4.7	5.0	5.4	C	21	0.28	EEE1EA4R7NR	(1)	1000
	10	6.3	5.4	D	28	0.28	EEE1EA100NP	(1)	1000
35	2.2	4.0	5.4	B	12	0.24	EEE1VA2R2NR	(1)	2000
	4.7	5.0	5.4	C	22	0.24	EEE1VA4R7NR	(1)	1000
	10	6.3	5.4	D	30	0.24	EEE1VA100NP	(1)	1000
50	1	4.0	5.4	B	10	0.24	EEE1HA010NR	(1)	2000
	2.2	5.0	5.4	C	16	0.24	EEE1HA2R2NR	(1)	1000
	3.3	5.0	5.4	C	21	0.24	EEENZ1H3R3R	(1)	1000
	4.7	6.3	5.4	D	31	0.24	EEE1HA4R7NP	(1)	1000

*1: Ripple current (120 Hz / +85 ℃)
*2: tanδ (120 Hz / +20 ℃)
・Please refer to the page of “Refl ow Profi le” and “The Taping Dimensions”.
・When requesting vibration-proof product, please put the last “V” instead to “P”

Design and specifications are each subject to change without notice. Ask factory for the current technical specifications before purchase and/or use.
Should a safety concern arise regarding this product, please be sure to contact us immediately.

Panasonic
INDUSTRY

This series is not a recommended product.
Not recommended for new design.

Hight-temperature assuranceize

HA
↑
S

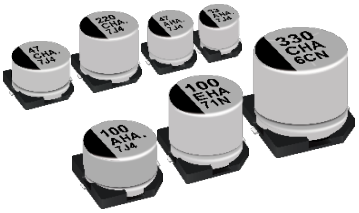

Aluminum Electrolytic Capacitors

Surface Mount Type

HA series

High temperature Lead-Free reflow (suffix : A*)

Features

- Endurance : 105 °C 1000 h
- Vibration-proof product (30G guaranteed) is available upon request (ø8 ≤)
- AEC-Q200 compliant
- RoHS compliant

Specifications

Category temp. range	–40 °C to +105 °C							
Rated voltage range	6.3 V to 50 V							
Capacitance range	1 µF to 1500 µF							
Capacitance tolerance	±20 % (120 Hz / +20°C)							
Leakage current	I ≤ 0.01 CV or 3 (µA), whichever is greater, 2 minutes after reaching rated voltage, 20 °C *CV = (Capacitance in µF) x (Rated voltage in V)							
Dissipation factor (tan δ)	Please see the attached characteristics list							
Characteristics at low temperature	Rated voltage (V)	6.3	10	16	25	35	50	(Impedance ratio at 120 Hz)
	Z (-25 °C) / Z (+20 °C)	4	3	2	2	2	2	
	Z (-40 °C) / Z (+20 °C)	8	6	4	4	3	3	
Endurance	After applying rated working voltage for 1000 hours at +105 °C ± 2 °C and then being stabilized at +20 °C, capacitors shall meet the following limits.							
	Capacitance change	Within ±30 % of the initial value						
	Dissipation factor (tan δ)	≤ 200 % of the initial limit						
	DC leakege current	Within the initial limit						
Shelf life	After storage for 1000 hours at +105 °C ± 2 °C with no voltage applied and then being stabilized at +20 °C, capacitors shall meet the limits specified in endurance. (Capacitors are left at room temperature and humidity for 2 hours after the test. Then, apply the rated voltage for 30min with a series protection resistance of 1000 Ω ± 10 Ω. Measure electrical characteristics after discharging the capacitor.)							
Resistance to soldering heat	After reflow soldering and then being stabilized at +20 °C, capacitors shall meet the following limits.							
	Capacitance change	Within ±10 % of the initial value						
	Dissipation factor (tan δ)	Within the initial limit						
	DC leakege current	Within the initial limit						

Frequency correction factor for ripple current

Frequency (Hz)	50, 60	120	1 k	10 k to
Correction factor	0.70	1.00	1.30	1.70

Marking

Example : 6.3 V 22 µF
Marking color : BLACK

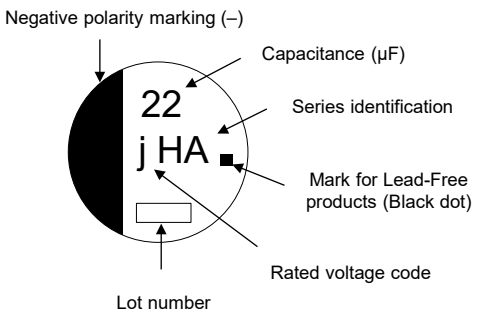

R.voltage code

j	6.3	E	25
A	10	V	35
C	16	H	50

Unit : V

Dimensions

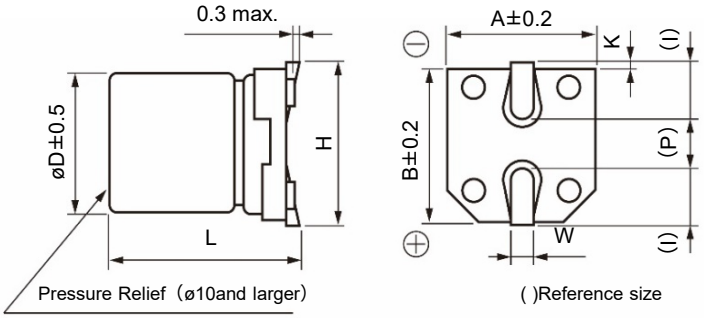

Unit : mm

Size code	øD	L	A, B	H	I	W	P	K
B	4.0	$5.4^{+0.1}_{-0.2}$	4.3	5.5 max.	1.8	0.65±0.1	1.0	$0.35^{+0.15}_{-0.20}$
C	5.0	$5.4^{+0.1}_{-0.2}$	5.3	6.5 max.	2.2	0.65±0.1	1.5	$0.35^{+0.15}_{-0.20}$
D	6.3	$5.4^{+0.1}_{-0.2}$	6.6	7.8 max.	2.6	0.65±0.1	1.8	$0.35^{+0.15}_{-0.20}$
D 8	6.3	7.7±0.3	6.6	7.8 max.	2.6	0.65±0.1	1.8	$0.35^{+0.15}_{-0.20}$
E	8.0	6.2±0.3	8.3	9.5 max.	3.4	0.65±0.1	2.2	$0.35^{+0.15}_{-0.20}$
F	8.0	10.2±0.3	8.3	10.0 max.	3.4	0.90±0.2	3.1	0.70±0.2
G	10.0	10.2±0.3	10.3	12.0 max.	3.5	0.90±0.2	4.6	0.70±0.2

・The dimensions of the vibration-proof products, please refer to the page of the mounting specification.

Design and specifications are each subject to change without notice. Ask factory for the current technical specifications before purchase and/or use.
Should a safety concern arise regarding this product, please be sure to contact us immediately.

Explanation of part numbers

◇ Part number system

e.g.: EEEHAJ331XAP

EEE	HA	J	331	XA	P
Product classification	Series / Code	Rated voltage (V) / Code*	Capacitance (μF) / Code / Capacitance (μF) / Code	Special code / Code	Tape width (mm) / Code

Series	Code
HA	HA

Rated voltage (V)	Code*
6.3	0J(J)
10	1A(A)
16	1C(C)
25	1E(E)
35	1V(V)
50	1H(H)

Capacitance (μF)	Code	Capacitance (μF)	Code
1	10	100	101
2.2	2R2	220	221
3.3	3R3	330	331
4.7	4R7	470	471
10	100	680	681
22	220	1000	102
33	330	1500	152
47	470		

Special code	Code
High-temperature lead-free reflow	A
Minia-turized product	U, W
D8 size	X

(Two codes can be combined)

Tape width (mm)	Code
12	R
16, 24	P

*: The text "0" or "1" is omitted when the part number exceeds 12 figures.
0J →J, 1A→A, 1C→C, 1E→E, 1V→V, 1H→H

Characteristics list

Endurance : 105 °C 1000 h

Rated voltage (V)	Capacitance (±20 %) (μF)	Case size (mm) øD	Case size (mm) L	Size code*1	Specification Ripple current*2 (mA rms)	Specification tan δ*3	Part No.	Reflow	Min. Packaging Q'ty (pcs) Taping
6.3	22	4.0	5.4	B	29	0.30	EEEHA0J220AR	(5)	2000
	33	4.0	5.4	(B)	29	0.35	EEEHAJ330WAR	(5)	2000
	47	5.0	5.4	C	46	0.30	EEEHA0J470AR	(5)	1000
	100	5.0	5.4	(C)	47	0.40	EEEHAJ101WAR	(5)	1000
		6.3	5.4	D	71	0.30	EEEHA0J101AP	(5)	1000
	330	6.3	7.7	D8	105	0.30	EEEHAJ331XAP	(5)	900
		8.0	6.2	(E)	180	0.35	EEEHAJ331UAP	(7)	1000
		8.0	10.2	F	230	0.35	EEEHA0J331AP	(7)	500
	470	8.0	10.2	(F)	300	0.35	EEEHAJ471UAP	(7)	500
	1000	10.0	10.2	G	400	0.35	EEEHA0J102AP	(7)	500
	1500	10.0	10.2	(G)	480	0.50	EEEHAJ152UAP	(7)	500
10	22	4.0	5.4	(B)	28	0.30	EEEHAA220WAR	(5)	2000
	33	4.0	5.4	(B)	29	0.30	EEEHAA330WAR	(5)	2000
		5.0	5.4	C	43	0.22	EEEHA1A330AR	(5)	1000
	47	5.0	5.4	(C)	43	0.30	EEEHAA470WAR	(5)	1000
	100	6.3	5.4	(D)	71	0.30	EEEHAA101WAP	(5)	1000
		8.0	6.2	E	110	0.26	EEEHA1A101AP	(7)	1000
	220	6.3	7.7	D8	105	0.22	EEEHAA221XAP	(5)	900
		8.0	10.2	F	160	0.26	EEEHA1A221AP	(7)	500
	470	8.0	10.2	(F)	200	0.26	EEEHAA471UAP	(7)	500
		10.0	10.2	G	270	0.26	EEEHA1A471AP	(7)	500
	1000	10.0	10.2	(G)	400	0.35	EEEHAA102UAP	(7)	500

*1: Size code( ) : Miniaturization product
*2: Ripple current (120 Hz / +105 °C)
*3: tanδ (120 Hz / +20 °C)
・Please refer to the page of "Refl ow Profi le" and "The Taping Dimensions".
・When requesting vibration-proof product, please put the last "V" instead to "P"

Design and specifications are each subject to change without notice. Ask factory for the current technical specifications before purchase and/or use.
Should a safety concern arise regarding this product, please be sure to contact us immediately.

Characteristics list

Endurance : 105 °C 1000 h

Rated voltage (V)	Capacitance (±20 %) (μF)	Case size (mm) øD	Case size (mm) L	Size code*1	Specification Ripple current*2 (mA rms)	Specification tan δ*3	Part No.	Reflow	Min. Packaging Q'ty (pcs) Taping
16	10	4.0	5.4	B	28	0.16	EEEHA1C100AR	(5)	2000
	22	4.0	5.4	(B)	28	0.26	EEEHAC220WAR	(5)	2000
		5.0	5.4	C	39	0.16	EEEHA1C220AR	(5)	1000
	33	5.0	5.4	(C)	35	0.26	EEEHAC330WAR	(5)	1000
	47	5.0	5.4	(C)	39	0.26	EEEHAC470WAR	(5)	1000
		6.3	5.4	D	70	0.16	EEEHA1C470AP	(5)	1000
	100	6.3	5.4	(D)	70	0.26	EEEHAC101WAP	(5)	1000
	220	6.3	7.7	D8	105	0.20	EEEHAC221XAP	(5)	900
		8.0	10.2	(F)	150	0.20	EEEHAC221UAP	(7)	500
		10.0	10.2	G	210	0.20	EEEHA1C221AP	(7)	500
	330	8.0	10.2	(F)	170	0.20	EEEHAC331UAP	(7)	500
		10.0	10.2	G	230	0.20	EEEHA1C331AP	(7)	500
	470	8.0	10.2	(F)	340	0.26	EEEHAC471UAP	(7)	500
		10.0	10.2	G	340	0.20	EEEHA1C471AP	(7)	500
	680	10.0	10.2	(G)	380	0.26	EEEHAC681UAP	(7)	500
25	4.7	4.0	5.4	B	22	0.14	EEEHA1E4R7AR	(5)	2000
	10	4.0	5.4	(B)	22	0.20	EEEHAE100WAR	(5)	2000
		5.0	5.4	C	28	0.14	EEEHA1E100AR	(5)	1000
	22	5.0	5.4	(C)	35	0.20	EEEHAE220WAR	(5)	1000
		6.3	5.4	D	55	0.14	EEEHA1E220AP	(5)	1000
	33	5.0	5.4	(C)	45	0.20	EEEHAE330WAR	(5)	1000
		6.3	5.4	D	65	0.14	EEEHA1E330AP	(5)	1000
	47	6.3	5.4	(D)	70	0.20	EEEHAE470WAP	(5)	1000
		8.0	6.2	E	91	0.16	EEEHA1E470AP	(7)	1000
	100	8.0	6.2	(E)	91	0.16	EEEHAE101UAP	(7)	1000
		6.3	7.7	D8	91	0.16	EEEHAE101XAP	(5)	900
		8.0	10.2	F	130	0.16	EEEHA1E101AP	(7)	500
	220	8.0	10.2	(F)	160	0.20	EEEHAE221UAP	(7)	500
		10.0	10.2	G	190	0.16	EEEHA1E221AP	(7)	500
	330	8.0	10.2	(F)	180	0.20	EEEHAE331UAP	(7)	500
		10.0	10.2	G	340	0.16	EEEHA1E331AP	(7)	500
	470	10.0	10.2	(G)	360	0.25	EEEHAE471UAP	(7)	500
35	4.7	4.0	5.4	B	22	0.12	EEEHA1V4R7AR	(5)	2000
	10	4.0	5.4	(B)	22	0.16	EEEHAV100WAR	(5)	2000
		5.0	5.4	C	30	0.12	EEEHA1V100AR	(5)	1000
	22	5.0	5.4	(C)	35	0.16	EEEHAV220WAR	(5)	1000
		6.3	5.4	D	60	0.12	EEEHA1V220AP	(5)	1000
	33	6.3	5.4	(D)	42	0.16	EEEHAV330WAP	(5)	1000
		8.0	6.2	E	84	0.14	EEEHA1V330AP	(7)	1000
	47	8.0	6.2	(E)	84	0.14	EEEHAV470UAP	(7)	1000
		8.0	10.2	F	98	0.14	EEEHA1V470AP	(7)	500
	100	6.3	7.7	D8	84	0.14	EEEHAV101XAP	(5)	900
		8.0	10.2	(F)	120	0.14	EEEHAV101UAP	(7)	500
		10.0	10.2	G	160	0.14	EEEHA1V101AP	(7)	500
	220	8.0	10.2	(F)	170	0.14	EEEHAV221UAP	(7)	500
		10.0	10.2	G	210	0.14	EEEHA1V221AP	(7)	500
	330	10.0	10.2	(G)	250	0.30	EEEHAV331UAP	(7)	500
50	1	4.0	5.4	B	10	0.12	EEEHA1H1R0AR	(5)	2000
	2.2	4.0	5.4	B	16	0.12	EEEHA1H2R2AR	(5)	2000
	3.3	4.0	5.4	B	16	0.12	EEEHA1H3R3AR	(5)	2000
	4.7	5.0	5.4	C	23	0.12	EEEHA1H4R7AR	(5)	1000
	10	6.3	5.4	D	35	0.12	EEEHA1H100AP	(5)	1000
	22	8.0	6.2	E	70	0.12	EEEHA1H220AP	(7)	1000
	33	6.3	7.7	D8	70	0.14	EEEHAH330XAP	(5)	900
		8.0	6.2	(E)	70	0.12	EEEHAH330UAP	(7)	1000
		8.0	10.2	F	91	0.12	EEEHA1H330AP	(7)	500
	47	6.3	7.7	D8	63	0.14	EEEHAH470XAP	(5)	900
		8.0	10.2	(F)	95	0.12	EEEHAH470UAP	(7)	500
		10.0	10.2	G	100	0.12	EEEHA1H470AP	(7)	500
	100	8.0	10.2	(F)	110	0.18	EEEHAH101UAP	(7)	500
		10.0	10.2	G	120	0.12	EEEHA1H101AP	(7)	500
	220	10.0	10.2	(G)	150	0.18	EEEHAH221UAP	(7)	500

*1: Size code( ) : Miniaturization product *2: Ripple current (120 Hz / +105 °C) *3: tanδ (120 Hz / +20 °C)

・Please refer to the page of “Refl ow Profi le” and “The Taping Dimensions”.

・When requesting vibration-proof product, please put the last “V” instead to “P”

Panasonic
INDUSTRY

This series is not a recommended product.
Not recommended for new design.

Aluminum Electrolytic Capacitors

Surface Mount Type

HA series

Hight-temperature assuranceize

HA
↑
S

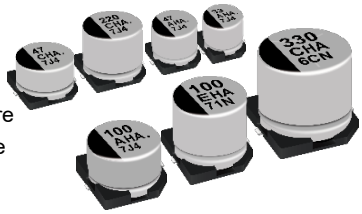

Features

- Endurance : 105 °C 1000 h
- Vibration-proof product (30G guaranteed) is available upon request (ø8 ≤)
- AEC-Q200 compliant
- RoHS compliant

Specifications

Category temp. range	–40 °C to +105 °C									
Rated voltage range	6.3 V to 100 V									
Capacitance range	1 µF to 1500 µF									
Capacitance tolerance	±20 % (120 Hz / +20°C)									
Leakage current	I ≤ 0.01 CV or 3 (µA), whichever is greater, 2 minutes after reaching rated voltage, 20 °C *CV = (Capacitance in µF) x (Rated voltage in V)									
Dissipation factor (tan δ)	Please see the attached characteristics list									
Characteristics at low temperature	Rated voltage (V)	6.3	10	16	25	35	50	63	100	(Impedance ratio at 120 Hz)
	Z (-25 °C) / Z (+20 °C)	4	3	2	2	2	2	3	3	
	Z (-40 °C) / Z (+20 °C)	8	6	4	4	3	3	4	4	
Endurance	After applying rated working voltage for 1000 hours at +105 °C ± 2 °C and then being stabilized at +20 °C, capacitors shall meet the following limits.									
	Capacitance change	Within ±20 % of the initial value (6.3 V of miniature : ±30 %)								
	Dissipation factor (tan δ)	≤ 200 % of the initial limit								
	DC leakege current	Within the initial limit								
Shelf life	After storage for 1000 hours at +105 °C ± 2 °C with no voltage applied and then being stabilized at +20 °C, capacitors shall meet the limits specified in endurance. (Capacitors are left at room temperature and humidity for 2 hours after the test. Then, apply the rated voltage for 30min with a series protection resistance of 1000 Ω ± 10 Ω. Measure electrical characteristics after discharging the capacitor.)									
Resistance to soldering heat	After reflow soldering and then being stabilized at +20 °C, capacitors shall meet the following limits.									
	Capacitance change	Within ±10 % of the initial value								
	Dissipation factor (tan δ)	Within the initial limit								
	DC leakege current	Within the initial limit								

Frequency correction factor for ripple current

Frequency (Hz)	50, 60	120	1 k	10 k to
Correction factor	0.70	1.00	1.30	1.70

Marking

Example : 6.3 V 22 µF
Marking color : BLACK

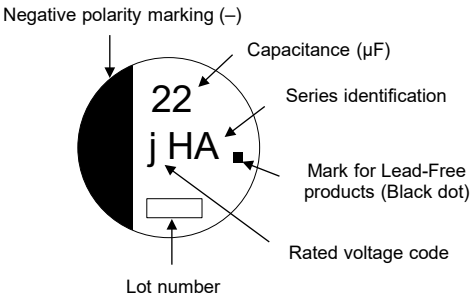

R.voltage code

Unit : V

A	10	H	50
C	16	J	63
E	25	K	80
V	35	2A	100

Dimensions

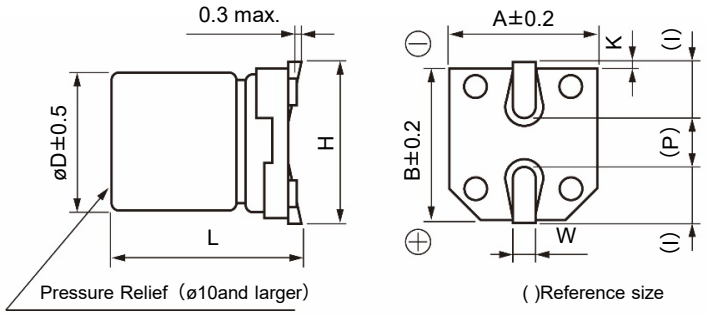

Unit : mm

Size code	øD	L	A, B	H	I	W	P	K
B	4.0	5.4 $^{+0.1}_{-0.2}$	4.3	5.5 max.	1.8	0.65±0.1	1.0	0.35 $^{+0.15}_{-0.20}$
C	5.0	5.4 $^{+0.1}_{-0.2}$	5.3	6.5 max.	2.2	0.65±0.1	1.5	0.35 $^{+0.15}_{-0.20}$
D	6.3	5.4 $^{+0.1}_{-0.2}$	6.6	7.8 max.	2.6	0.65±0.1	1.8	0.35 $^{+0.15}_{-0.20}$
D8	6.3	7.7±0.3	6.6	7.8 max.	2.6	0.65±0.1	1.8	0.35 $^{+0.15}_{-0.20}$
E	8.0	6.2±0.3	8.3	9.5 max.	3.4	0.65±0.1	2.2	0.35 $^{+0.15}_{-0.20}$
F	8.0	10.2±0.3	8.3	10.0 max.	3.4	0.90±0.2	3.1	0.70±0.2
G	10.0	10.2±0.3	10.3	12.0 max.	3.5	0.90±0.2	4.6	0.70±0.2

・The dimensions of the vibration-proof products, please refer to the page of the mounting specification.

Design and specifications are each subject to change without notice. Ask factory for the current technical specifications before purchase and/or use.
Should a safety concern arise regarding this product, please be sure to contact us immediately.

Explanation of part numbers

◇ Part number system

e.g.: EEEHA0J331XP

EEE	HA	0 J	331	X	P
Product classification	Series / Code	Rated voltage (V) / Code*	Capacitance (μF) / Code	Special code / Code	Tape width (mm) / Code

Series	Code
HA	HA

Rated voltage (V)	Code*
6.3	0J
10	1A
16	1C
25	1E
35	1V
50	1H
63	1J
100	2A

Capacitance (μF)	Code	Capacitance (μF)	Code
1	10	100	101
2.2	2R5	220	221
3.3	3R3	330	331
4.7	4R7	470	471
10	100	680	681
22	220	1000	102
33	330	1500	152
47	470		

Special code	Code
Miniaturized product	U, W
D8 size	X
Others	–

Tape width (mm)	Code
12	R
16, 24	P

Characteristics list

Endurance : 105 °C 1000 h

Rated voltage (V)	Capacitance (±20 %) (μF)	Case size (mm) øD	Case size (mm) L	Size code*1	Specification Ripple current*2 (mA rms)	Specification tan δ*3	Part No.	Reflow	Min. Packaging Q'ty (pcs) Taping
6.3	22	4.0	5.4	B	29	0.30	EEEHA0J220R	(1)	2000
	33	4.0	5.4	(B)	29	0.35	EEEHA0J330WR	(1)	2000
	47	4.0	5.4	(B)	36	0.35	EEEHA0J470WR	(1)	2000
		5.0	5.4	C	46	0.30	EEEHA0J470R	(1)	1000
	100	5.0	5.4	(C)	47	0.35	EEEHA0J101WR	(1)	1000
		6.3	5.4	D	71	0.30	EEEHA0J101P	(1)	1000
	220	6.3	5.4	(D)	74	0.35	EEEHA0J221WP	(1)	1000
	330	6.3	7.7	D8	105	0.30	EEEHA0J331XP	(1)	900
		8.0	10.2	F	230	0.35	EEEHA0J331P	(2)	500
	470	8.0	10.2	(F)	300	0.35	EEEHA0J471UP	(2)	500
	1000	8.0	10.2	(F)	300	0.35	EEEHA0J102UP	(2)	500
		10.0	10.2	G	400	0.35	EEEHA0J102P	(2)	500
	1500	10.0	10.2	G	480	0.35	EEEHA0J152P	(2)	500
10	22	4.0	5.4	(B)	28	0.30	EEEHA1A220WR	(1)	2000
	33	4.0	5.4	(B)	29	0.30	EEEHA1A330WR	(1)	2000
		5.0	5.4	C	43	0.22	EEEHA1A330R	(1)	1000
	47	5.0	5.4	(C)	43	0.30	EEEHA1A470WR	(1)	1000
	100	6.3	5.4	(D)	71	0.30	EEEHA1A101WP	(1)	1000
		8.0	6.2	E	110	0.26	EEEHA1A101P	(2)	1000
	220	6.3	7.7	D8	105	0.22	EEEHA1A221XP	(1)	900
		8.0	10.2	F	160	0.26	EEEHA1A221P	(2)	500
	470	8.0	10.2	(F)	200	0.26	EEEHA1A471UP	(2)	500
		10.0	10.2	G	270	0.26	EEEHA1A471P	(2)	500
	1000	10.0	10.2	G	400	0.26	EEEHA1A102P	(2)	500

*1: Size code( ) : Miniaturization product
*2: Ripple current (120 Hz / +105 °C)
*3: tanδ (120 Hz / +20 °C)
・Please refer to the page of “Refl ow Profi le” and “The Taping Dimensions”.
・When requesting vibration-proof product, please put the last “V” instead to “P”

Design and specifications are each subject to change without notice. Ask factory for the current technical specifications before purchase and/or use.
Should a safety concern arise regarding this product, please be sure to contact us immediately.

Characteristics list

Endurance : 105 °C 1000 h

Rated voltage (V)	Capacitance (±20 %) (μF)	Case size (mm) øD	Case size (mm) L	Size code*1	Specification Ripple current*2 (mA rms)	Specification tan δ*3	Part No.	Reflow	Min. Packaging Q'ty (pcs) Taping
16	10	4.0	5.4	B	28	0.16	EEEHA1C100R	(1)	2000
	22	4.0	5.4	(B)	28	0.26	EEEHA1C220WR	(1)	2000
		5.0	5.4	C	39	0.16	EEEHA1C220R	(1)	1000
	33	5.0	5.4	(C)	35	0.26	EEEHA1C330WR	(1)	1000
	47	5.0	5.4	(C)	39	0.26	EEEHA1C470WR	(1)	1000
		6.3	5.4	D	70	0.16	EEEHA1C470P	(1)	1000
	100	6.3	5.4	(D)	70	0.26	EEEHA1C101WP	(1)	1000
		8.0	6.2	E	91	0.20	EEEHA1C101UP	(2)	1000
	220	6.3	7.7	D8	105	0.16	EEEHA1C221XP	(1)	900
		8.0	10.2	(F)	150	0.20	EEEHA1C221UP	(2)	500
		10.0	10.2	G	210	0.20	EEEHA1C221P	(2)	500
	330	8.0	10.2	(F)	170	0.20	EEEHA1C331UP	(2)	500
		10.0	10.2	G	230	0.20	EEEHA1C331P	(2)	500
	470	8.0	10.2	(F)	340	0.20	EEEHA1C471UP	(2)	500
		10.0	10.2	G	340	0.20	EEEHA1C471P	(2)	500
	680	10.0	10.2	G	380	0.20	EEEHA1C681P	(2)	500
25	4.7	4.0	5.4	B	22	0.14	EEEHA1E4R7R	(1)	2000
	10	4.0	5.4	(B)	22	0.20	EEEHA1E100WR	(1)	2000
		5.0	5.4	C	28	0.14	EEEHA1E100R	(1)	1000
	22	5.0	5.4	(C)	35	0.20	EEEHA1E220WR	(1)	1000
		6.3	5.4	D	55	0.14	EEEHA1E220P	(1)	1000
	33	5.0	5.4	(C)	45	0.20	EEEHA1E330WR	(1)	1000
		6.3	5.4	D	65	0.14	EEEHA1E330P	(1)	1000
	47	6.3	5.4	(D)	70	0.20	EEEHA1E470WP	(1)	1000
		8.0	6.2	E	91	0.16	EEEHA1E470P	(2)	1000
	100	6.3	7.7	D8	91	0.14	EEEHA1E101XP	(1)	900
		8.0	6.2	(E)	91	0.16	EEEHA1E101UP	(2)	1000
		8.0	10.2	F	130	0.16	EEEHA1E101P	(2)	500
	220	8.0	10.2	(F)	160	0.16	EEEHA1E221UP	(2)	500
		10.0	10.2	G	190	0.16	EEEHA1E221P	(2)	500
	330	8.0	10.2	(F)	180	0.16	EEEHA1E331UP	(2)	500
		10.0	10.2	G	340	0.16	EEEHA1E331P	(2)	500
	470	10.0	10.2	G	360	0.16	EEEHA1E471P	(2)	500
35	4.7	4.0	5.4	B	22	0.12	EEEHA1V4R7R	(1)	2000
	10	4.0	5.4	(B)	22	0.16	EEEHA1V100WR	(1)	2000
		5.0	5.4	C	30	0.12	EEEHA1V100R	(1)	1000
	22	5.0	5.4	(C)	35	0.16	EEEHA1V220WR	(1)	1000
		6.3	5.4	D	60	0.12	EEEHA1V220P	(1)	1000
	33	6.3	5.4	(D)	42	0.16	EEEHA1V330WP	(1)	1000
		8.0	6.2	E	84	0.14	EEEHA1V330P	(2)	1000
	47	8.0	6.2	(E)	84	0.14	EEEHA1V470UP	(2)	1000
		8.0	10.2	F	98	0.14	EEEHA1V470P	(2)	500
	100	6.3	7.7	D8	84	0.12	EEEHA1V101XP	(1)	900
		8.0	10.2	(F)	120	0.14	EEEHA1V101UP	(2)	500
		10.0	10.2	G	160	0.14	EEEHA1V101P	(2)	500
	220	8.0	10.2	(F)	170	0.14	EEEHA1V221UP	(2)	500
		10.0	10.2	G	210	0.14	EEEHA1V221P	(2)	500
	330	10.0	10.2	G	250	0.14	EEEHA1V331P	(2)	500

*1: Size code( ) : Miniaturization product
*2: Ripple current (120 Hz / +105 °C)
*3: tanδ (120 Hz / +20 °C)
・Please refer to the page of “Refl ow Profi le” and “The Taping Dimensions”.
・When requesting vibration-proof product, please put the last “V” instead to “P”

Characteristics list

Endurance : 105 °C 1000 h

Rated voltage (V)	Capacitance (±20 %) (μF)	Case size (mm)		Size code*1	Specification		Part No.	Reflow	Min. Packaging Q'ty (pcs)
		øD	L		Ripple current*2 (mA rms)	tan δ*3			Taping
50	1	4.0	5.4	B	10	0.12	EEEHA1H1R0R	(1)	2000
	2.2	4.0	5.4	B	16	0.12	EEEHA1H2R2R	(1)	2000
	3.3	4.0	5.4	B	16	0.12	EEEHA1H3R3R	(1)	2000
	4.7	5.0	5.4	C	23	0.12	EEEHA1H4R7R	(1)	1000
	10	6.3	5.4	D	35	0.12	EEEHA1H100P	(1)	1000
	22	8.0	6.2	E	70	0.12	EEEHA1H220P	(2)	1000
	33	6.3	7.7	D8	70	0.12	EEEHA1H330XP	(1)	900
		8.0	6.2	(E)	70	0.12	EEEHA1H330UP	(2)	1000
		8.0	10.2	F	91	0.12	EEEHA1H330P	(2)	500
	47	6.3	7.7	D8	63	0.12	EEEHA1H470XP	(1)	900
		8.0	10.2	(F)	95	0.12	EEEHA1H470UP	(2)	500
		10.0	10.2	G	100	0.12	EEEHA1H470P	(2)	500
	100	8.0	10.2	(F)	110	0.12	EEEHA1H101UP	(2)	500
		10.0	10.2	G	120	0.12	EEEHA1H101P	(2)	500
	220	10.0	10.2	G	150	0.12	EEEHA1H221P	(2)	500
63	10	8.0	6.2	E	25	0.18	EEEHA1J100P	(2)	1000
	22	8.0	6.2	(E)	25	0.18	EEEHA1J220UP	(2)	1000
		8.0	10.2	F	30	0.18	EEEHA1J220P	(2)	500
	33	10.0	10.2	G	45	0.18	EEEHA1J330P	(2)	500
	47	8.0	10.2	(F)	45	0.18	EEEHA1J470UP	(2)	500
		10.0	10.2	G	50	0.18	EEEHA1J470P	(2)	500
100	4.7	8.0	6.2	(E)	30	0.18	EEEHA2A4R7UP	(2)	1000
	10	8.0	10.2	F	55	0.18	EEEHA2A100P	(2)	500
	22	8.0	10.2	(F)	55	0.18	EEEHA2A220UP	(2)	500
		10.0	10.2	G	60	0.18	EEEHA2A220P	(2)	500
	33	10.0	10.2	G	65	0.18	EEEHA2A330P	(2)	500
	47	10.0	10.2	(G)	65	0.18	EEEHA2A470UP	(2)	500

*1: Size code( ) : Miniaturization product
*2: Ripple current (120 Hz / +105 °C)
*3: tanδ (120 Hz / +20 °C)
・Please refer to the page of “Refl ow Profi le” and “The Taping Dimensions”.
・When requesting vibration-proof product, please put the last “V” instead to “P”

Panasonic
INDUSTRY

Aluminum Electrolytic Capacitors

Surface Mount Type

HB series

High temperature Lead-Free reflow (suffix : A*)

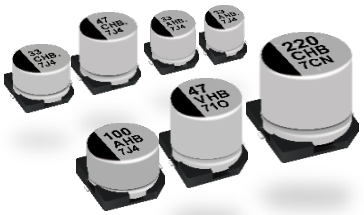

Features

- Endurance : 105 °C 2000 h
- Vibration-proof product (30G guaranteed) is available upon request. (ø8 ≤)
- AEC-Q200 compliant
- RoHS compliant

Specifications

Category temp. range	–40 °C to +105 °C								
Rated voltage range	6.3 V to 50 V								
Capacitance range	1 µF to 1500 µF								
Capacitance tolerance	±20 % (120 Hz / +20 °C)								
Leakage current	I ≤ 0.01 CV or 3 (µA), whichever is greater, 2 minutes after reaching rated voltage, 20 °C *CV = (Capacitance in µF) x (Rated voltage in V)								
Dissipation factor (tan δ)	Please see the attached characteristics list								
Characteristics at low temperature	Standard	Rated voltage (V)	6.3	10	16	25	35	50	(Impedance ratio at 120 Hz)
		Z (-25 °C) / Z (+20 °C)	4	3	2	2	2	2	
		Z (-40 °C) / Z (+20 °C)	8	6	4	4	3	3	
	Miniaturization product	Z (-25 °C) / Z (+20 °C)	4	3	2	2	2	2	
		Z (-40 °C) / Z (+20 °C)	10	8	6	6	4	4	
Endurance	After applying rated working voltage for 2000 h at +105 °C ± 2 °C and then being stabilized at +20 °C, capacitors shall meet the following limits.								
	Capacitance change	Within ±20 % of the initial value (16 V or less :Within ±25 %, Miniaturization product : Within ±35 %)							
	Dissipation factor (tan δ)	≤200 % of the initial limit							
	Leakage current	Within the initial limit							
Shelf life	After storage for 1000 h at +105 °C ± 2 °C with no voltage applied and then being stabilized at +20 °C, capacitors shall meet the limits specified in endurance. (Capacitors are left at room temperature and humidity for 2 hours after the test. Then, apply the rated voltage for 30min with a series protection resistance of 1000 Ω ± 10 Ω. Measure electrical characteristics after discharging the capacitor.)								
Resistance to soldering heat	After reflow soldering and then being stabilized at +20 °C, capacitors shall meet the following limits.								
	Capacitance change	Within ±10 % of the initial value							
	Dissipation factor (tan δ)	Within the initial limit							
	Leakage current	Within the initial limit							

Frequency correction factor for ripple current

Frequency (Hz)	50, 60	120	1 k	10 k to
Correction factor	0.70	1.00	1.30	1.70

Marking

Example : 6.3 V 22 µF
Marking color : BLACK

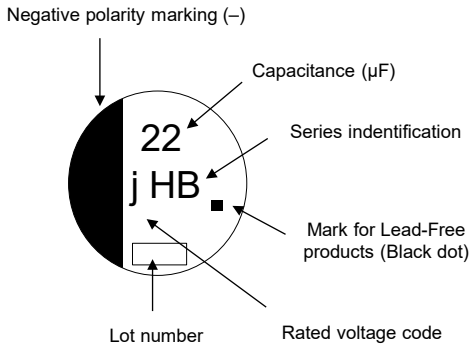

R. voltage code

j	6.3	E	25
A	10	V	35
C	16	H	50

Unit : V

Dimensions

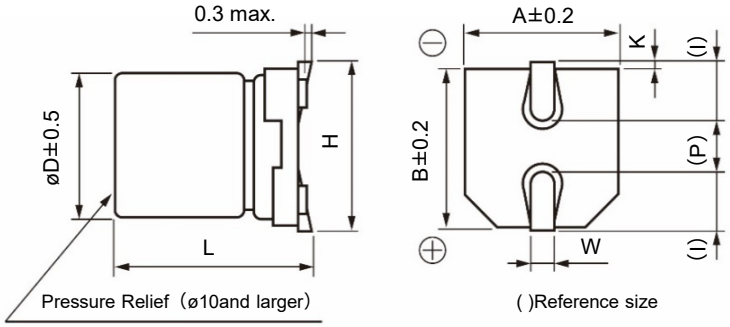

Unit : mm

Size code	øD	L	A, B	H	I	W	P	K
B	4.0	5.8±0.3	4.3	5.5 max.	1.8	0.65±0.1	1.0	0.35 +0.15 -0.20
C	5.0	5.8±0.3	5.3	6.5 max.	2.2	0.65±0.1	1.5	0.35 +0.15 -0.20
D	6.3	5.8±0.3	6.6	7.8 max.	2.6	0.65±0.1	1.8	0.35 +0.15 -0.20
D8	6.3	7.7±0.3	6.6	7.8 max.	2.6	0.65±0.1	1.8	0.35 +0.15 -0.20
E	8.0	6.2±0.3	8.3	9.5 max.	3.4	0.65±0.1	2.2	0.35 +0.15 -0.20
F	8.0	10.2±0.3	8.3	10.0 max.	3.4	0.90±0.2	3.1	0.70±0.2
G	10.0	10.2±0.3	10.3	12.0 max.	3.5	0.90±0.2	4.6	0.70±0.2

・The dimensions of the vibration-proof products, please refer to the page of the mounting specification.

Design and specifications are each subject to change without notice. Ask factory for the current technical specifications before purchase and/or use.
Should a safety concern arise regarding this product, please be sure to contact us immediately.

Explanation of part numbers

◇ Part number system

e.g.: EEEHB0J220AR

EEE	HB	0 J	220	A	R
Product classification	Series / Code	Rated volage (V) / Code*	Capacitance (μF) / Code / Capacitance (μF) / Code	Special code / Code	Tape width (mm) / Code

Series	Code
HB	HB

Rated volage (V)	Code*
6.3	0J(J)
10	1A(A)
16	1C(C)
25	1E(E)
35	1V(V)
50	1H(H)

Capacitance (μF)	Code	Capacitance (μF)	Code
1	10	47	470
2.2	2R2	68	680
3.3	3R3	100	101
4.7	4R7	150	151
6.8	6R8	220	221
10	100	330	331
22	220	470	471
33	330	1500	152

Special code	Code
High-temperature lead-free reflow	A
Minia-turized product	U
D8 size	X
Downsize to D8 size	Y

(Two codes can be combined.)

Tape width (mm)	Code
12	R
16, 24	P

*: The text "0" or "1" is omitted when the part number exceeds 12 figures.
0J →J, 1A→A, 1C→C, 1E→E, 1V→V, 1H→H

Characteristics list

Endurance : 105 °C 2000 h

Rated voltage (V)	Capacitance (±20 %) (μF)	Case size (mm) øD	Case size (mm) L	Size code*1	Specification Ripple current*2 (mA rms)	Specification tan δ*3	Part No.	Reflow	Min. Packaging Q'ty (pcs) Taping
6.3	22	4.0	5.8	B	26	0.30	EEEHB0J220AR	(5)	2000
	33	4.0	5.8	B	29	0.30	EEEHB0J330AR	(5)	2000
	47	4.0	5.8	(B)	26	0.50	EEEHBJ470UAR	(5)	2000
		5.0	5.8	C	46	0.30	EEEHB0J470AR	(5)	1000
	100	5.0	5.8	(C)	42	0.50	EEEHBJ101UAR	(5)	1000
		6.3	5.8	D	71	0.30	EEEHB0J101AP	(5)	1000
	220	6.3	5.8	(D)	80	0.50	EEEHBJ221UAP	(5)	1000
		8.0	10.2	F	150	0.35	EEEHB0J221AP	(7)	500
	330	8.0	6.2	(E)	180	0.50	EEEHBJ331UAP	(7)	1000
		8.0	10.2	F	230	0.35	EEEHB0J331AP	(7)	500
	470	8.0	10.2	(F)	230	0.50	EEEHBJ471UAP	(7)	500
	1500	10.0	10.2	(G)	290	0.50	EEEHBJ152UAP	(7)	500
10	33	4.0	5.8	(B)	23	0.30	EEEHBA330UAR	(5)	2000
		5.0	5.8	C	43	0.26	EEEHB1A330AR	(5)	1000
	68	6.3	5.8	D	70	0.22	EEEHB1A680AP	(5)	1000
	100	6.3	5.8	(D)	71	0.30	EEEHBA101UAP	(5)	1000
		8.0	6.2	E	110	0.26	EEEHB1A101AP	(7)	1000
	150	6.3	5.8	(D)	64	0.50	EEEHBA151UAP	(5)	1000
	220	8.0	6.2	(E)	110	0.30	EEEHBA221UAP	(7)	1000
		8.0	10.2	F	160	0.26	EEEHB1A221AP	(7)	500
	470	8.0	10.2	(F)	220	0.35	EEEHBA471UAP	(7)	500
		10.0	10.2	G	270	0.26	EEEHB1A471AP	(7)	500

*1: Size code( ) : Miniaturization product
*2: Ripple current (120 Hz / +105 °C)
*3: tanδ (120 Hz / +20 °C)
・Please refer to the page of "Refl ow Profi le" and "The Taping Dimensions".
・When requesting vibration-proof product, please put the last "V" instead to "P"

Design and specifications are each subject to change without notice. Ask factory for the current technical specifications before purchase and/or use.
Should a safety concern arise regarding this product, please be sure to contact us immediately.

Characteristics list

Endurance : 105 °C 2000 h

Rated voltage (V)	Capacitance (±20 %) (μF)	Case size (mm) øD	Case size (mm) L	Size code*1	Specification Ripple current*2 (mA rms)	Specification tan δ*3	Part No.	Reflow	Min. Packaging Q'ty (pcs) Taping
16	10	4.0	5.8	B	28	0.16	EEEHB1C100AR	(5)	2000
	22	4.0	5.8	(B)	29.5	0.26	EEEHBC220UAR	(5)	2000
		5.0	5.8	C	39	0.16	EEEHB1C220AR	(5)	1000
	33	6.3	5.8	D	65	0.16	EEEHB1C330AP	(5)	1000
	47	5.0	5.8	(C)	39	0.26	EEEHBC470UAR	(5)	1000
		6.3	5.8	D	70	0.16	EEEHB1C470AP	(5)	1000
		6.3	7.7	D8	84	0.16	EEEHBC470XAP	(5)	900
	100	6.3	5.8	(D)	70	0.26	EEEHBC101UAP	(5)	1000
		8.0	10.2	F	120	0.20	EEEHB1C101AP	(7)	500
	220	8.0	10.2	(F)	150	0.20	EEEHBC221UAP	(7)	500
		10.0	10.2	G	210	0.20	EEEHB1C221AP	(7)	500
	330	10.0	10.2	G	230	0.20	EEEHB1C331AP	(7)	500
	470	8.0	10.2	(F)	240	0.40	EEEHBC471UAP	(7)	500
		10.0	10.2	G	340	0.20	EEEHB1C471AP	(7)	500
25	4.7	4.0	5.8	B	22	0.14	EEEHB1E4R7AR	(5)	2000
	6.8	4.0	5.8	B	25	0.14	EEEHB1E6R8AR	(5)	2000
	10	4.0	5.8	(B)	28	0.16	EEEHBE100UAR	(5)	2000
		5.0	5.8	C	28	0.14	EEEHB1E100AR	(5)	1000
	22	6.3	5.8	D	55	0.14	EEEHB1E220AP	(5)	1000
	33	5.0	5.8	(C)	50	0.20	EEEHBE330UAR	(5)	1000
		6.3	5.8	D	65	0.14	EEEHB1E330AP	(5)	1000
	47	6.3	5.8	(D)	65	0.20	EEEHBE470UAP	(5)	1000
		8.0	6.2	E	91	0.16	EEEHB1E470AP	(7)	1000
	100	8.0	6.2	(E)	100	0.16	EEEHBE101UAP	(7)	1000
		8.0	10.2	F	130	0.16	EEEHB1E101AP	(7)	500
	220	8.0	10.2	(F)	130	0.30	EEEHBE221UAP	(7)	500
		10.0	10.2	G	190	0.16	EEEHB1E221AP	(7)	500
	330	8.0	10.2	(F)	130	0.30	EEEHBE331UAP	(7)	500
		10.0	10.2	G	220	0.16	EEEHB1E331AP	(7)	500
	470	10.0	10.2	(G)	230	0.30	EEEHBE471UAP	(7)	500
35	4.7	4.0	5.8	B	21	0.12	EEEHB1V4R7AR	(5)	2000
	6.8	4.0	5.8	(B)	25	0.12	EEEHBV6R8UAR	(5)	2000
	10	5.0	5.8	C	28	0.12	EEEHB1V100AR	(5)	1000
	22	6.3	5.8	D	55	0.12	EEEHB1V220AP	(5)	1000
	33	8.0	6.2	E	84	0.14	EEEHB1V330AP	(7)	1000
	47	6.3	7.7	D8	98	0.20	EEEHBV470YAP	(5)	900
		8.0	6.2	(E)	91	0.18	EEEHBV470UAP	(7)	1000
		8.0	10.2	F	98	0.14	EEEHB1V470AP	(7)	500
	100	8.0	10.2	(F)	98	0.20	EEEHBV101UAP	(7)	500
		10.0	10.2	G	160	0.14	EEEHB1V101AP	(7)	500
	220	10.0	10.2	(G)	180	0.14	EEEHBV221UAP	(7)	500
50	1	4.0	5.8	B	10	0.12	EEEHB1H1R0AR	(5)	2000
	2.2	4.0	5.8	B	16	0.12	EEEHB1H2R2AR	(5)	2000
	3.3	4.0	5.8	B	16	0.12	EEEHB1H3R3AR	(5)	2000
	4.7	5.0	5.8	C	23	0.12	EEEHB1H4R7AR	(5)	1000
	6.8	5.0	5.8	C	23	0.12	EEEHB1H6R8AR	(5)	1000
	10	6.3	5.8	D	35	0.12	EEEHB1H100AP	(5)	1000
	22	6.3	5.8	(D)	35	0.14	EEEHBH220UAP	(5)	1000
		8.0	6.2	E	70	0.12	EEEHB1H220AP	(7)	1000
	33	8.0	10.2	F	91	0.12	EEEHB1H330AP	(7)	500
	47	6.3	7.7	D8	63	0.12	EEEHBH470YAP	(5)	900
		8.0	10.2	(F)	95	0.12	EEEHBH470UAP	(7)	500
		10.0	10.2	G	100	0.12	EEEHB1H470AP	(7)	500
	100	10.0	10.2	(G)	250	0.12	EEEHBH101UAP	(7)	500
	220	10.0	10.2	(G)	270	0.18	EEEHBH221UAP	(7)	500

*1: Size code( ) : Miniaturization product *2: Ripple current (120 Hz / +105 °C) *3: tanδ (120 Hz / +20 °C)

・Please refer to the page of “Refl ow Profi le” and “The Taping Dimensions”.

・When requesting vibration-proof product, please put the last “V” instead to “P”

Design and specifications are each subject to change without notice. Ask factory for the current technical specifications before purchase and/or use.
Should a safety concern arise regarding this product, please be sure to contact us immediately.

Panasonic INDUSTRY

Size 5.5 mm of this series is not a recommended product.

Aluminum Electrolytic Capacitors

Surface Mount Type

HB series

Long life

HB

↑

HA

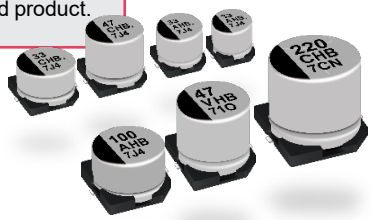

Features

- Endurance : 105 °C 2000 h
- 5.8 mm height (≤ ø6.3), 5.5 mm height max.
- Vibration-proof product (30G guaranteed) is available upon request. (ø8 ≤)
- AEC-Q200 compliant
- RoHS compliant

Specifications

Category temp. range	–40 °C to +105 °C								
Rated voltage range	4.0 V to 50 V								
Capacitance range	1 µF to 470 µF								
Capacitance tolerance	±20 % (120 Hz / +20 °C)								
Leakage current	I ≤ 0.01 CV or 3 (µA) [Bi-polar : I ≤ 0.02 CV or 6 (µA)] , 2 minutes after reaching rated voltage, 20 °C *CV = (Capacitance in µF) x (Rated voltage in V)								
Dissipation factor (tan δ)	Please see the attached characteristics list								
Characteristics at low temperature	Rated voltage（V）	4	6.3	10	16	25	35	50	(Impedance ratio at 120 Hz)
	Z (-25 °C) / Z (+20 °C)	7	4	3	2	2	2	2	
	Z (-40 °C) / Z (+20 °C)	15	8	6	4	4	3	3	
Endurance	After applying rated working voltage for 2000 h (Bi-polar:1000 h for each polarity) at +105 °C ± 2 °C and then being stabilized at +20 °C, capacitors shall meet the following limits.								
	Capacitance change	Within ±20 % of the initial value (4 V : ±35 % 6.3 V : ±25 % 04 to 06.3), 5.5 mm max. : ±25 %							
	Dissipation factor (tan δ)	≤200 % of the initial limit							
	Leakage current	Within the initial limit							
Shelf life	After storage for 1000 h at +105 °C ± 2 °C with no voltage applied and then being stabilized at +20 °C, capacitors shall meet the limits specified in endurance. (Capacitors are left at room temperature and humidity for 2 hours after the test. Then, apply the rated voltage for 30min with a series protection resistance of 1000 Ω ± 10 Ω. Measure electrical characteristics after discharging the capacitor.)								
Resistance to soldering heat	After reflow soldering and then being stabilized at +20 °C, capacitors shall meet the following limits.								
	Capacitance change	Within ±10 % of the initial value							
	Dissipation factor (tan δ)	Within the initial limit							
	Leakage current	Within the initial limit							

Frequency correction factor for ripple current

Frequency (Hz)	50, 60	120	1 k	10 k to
Correction factor	0.70	1.00	1.30	1.70

Marking

Example : 4.0 V 47 µF
Marking color : BLACK

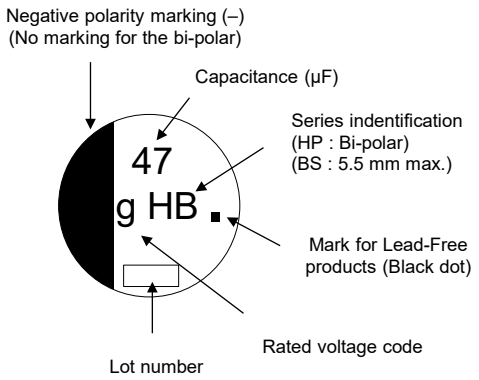

R. voltage code

g	4.0
j	6.3
A	10
C	16

Unit : V

E	25
V	35
H	50

Dimensions

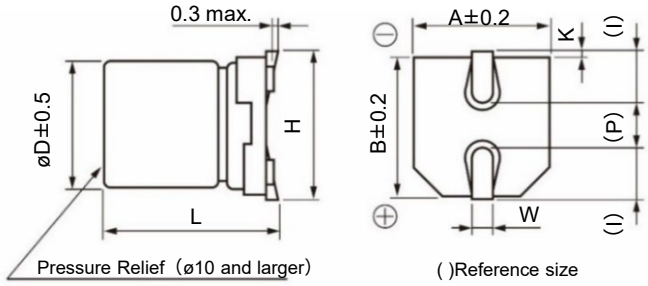

Unit : mm

Size code	øD	L	A,B	H	I	W	P	K
B	4.0	5.8±0.3	4.3	5.5 max.	1.8	0.65±0.1	1.0	0.35 +0.15 -0.20
C	5.0	5.8±0.3	5.3	6.5 max.	2.2	0.65±0.1	1.5	0.35 +0.15 -0.20
D	6.3	5.8±0.3	6.6	7.8 max.	2.6	0.65±0.1	1.8	0.35 +0.15 -0.20
E	8.0	6.2±0.3	8.3	9.5 max.	3.4	0.65±0.1	2.2	0.35 +0.15 -0.20
F	8.0	10.2±0.3	8.3	10.0 max.	3.4	0.90±0.2	3.1	0.70±0.2
G	10.0	10.2±0.3	10.3	12.0 max.	3.5	0.90±0.2	4.6	0.70±0.2

● Low profile (L=5.5 mm max.)

Size code	øD	L	A,B	H	I	W	P	K
B	4.0	5.4 +0.1 -0.2	4.3	5.5 max.	1.8	0.65±0.1	1.0	0.35 +0.15 -0.20
C	5.0	5.4 +0.1 -0.2	5.3	6.5 max.	2.2	0.65±0.1	1.5	0.35 +0.15 -0.20
D	6.3	5.4 +0.1 -0.2	6.6	7.8 max.	2.6	0.65±0.1	1.8	0.35 +0.15 -0.20

・The dimensions of the vibration-proof products, please refer to the page of the mounting specification.

Design and specifications are each subject to change without notice. Ask factory for the current technical specifications before purchase and/or use.
Should a safety concern arise regarding this product, please be sure to contact us immediately.

Characteristics list

Endurance : 105 °C 2000 h

Rated voltage (V)	Capacitance (±20 %) (μF)	Case size (mm)		Size code	Specification		Part No.	Reflow	Min. Packaging Q'ty (pcs)
		øD	L		Ripple current*1 (mA rms)	tan δ*2			Taping
4	47	4.0	5.8	B	34	0.50	EEEHB0G470R	(1)	2000
	100	5.0	5.8	C	61	0.50	EEEHB0G101R	(1)	1000
	150	6.3	5.8	D	82	0.50	EEEHB0G151P	(1)	1000
	220	6.3	5.8	D	82	0.50	EEEHB0G221P	(1)	1000
6.3	22	4.0	5.8	B	26	0.30	EEEHB0J220R	(1)	2000
	33	4.0	5.8	B	29	0.30	EEEHB0J330R	(1)	2000
	47	5.0	5.8	C	46	0.30	EEEHB0J470R	(1)	1000
	100	6.3	5.8	D	71	0.30	EEEHB0J101P	(1)	1000
	220	8.0	10.2	F	150	0.35	EEEHB0J221P	(2)	500
	330	8.0	10.2	F	230	0.35	EEEHB0J331P	(2)	500
10	33	5.0	5.8	C	43	0.22	EEEHB1A330R	(1)	1000
	100	8.0	6.2	E	110	0.26	EEEHB1A101P	(2)	1000
	220	8.0	10.2	F	160	0.26	EEEHB1A221P	(2)	500
	470	10.0	10.2	G	270	0.26	EEEHB1A471P	(2)	500
16	10	4.0	5.8	B	28	0.16	EEEHB1C100R	(1)	2000
	22	5.0	5.8	C	39	0.16	EEEHB1C220R	(1)	1000
	47	6.3	5.8	D	70	0.16	EEEHB1C470P	(1)	1000
	100	8.0	10.2	F	120	0.20	EEEHB1C101P	(2)	500
	220	10.0	10.2	G	210	0.20	EEEHB1C221P	(2)	500
	330	10.0	10.2	G	230	0.20	EEEHB1C331P	(2)	500
25	4.7	4.0	5.8	B	22	0.14	EEEHB1E4R7R	(1)	2000
	6.8	4.0	5.8	B	25	0.14	EEEHB1E6R8R	(1)	2000
	33	6.3	5.8	D	65	0.14	EEEHB1E330P	(1)	1000
	47	8.0	6.2	E	91	0.16	EEEHB1E470P	(2)	1000
	100	8.0	10.2	F	130	0.16	EEEHB1E101P	(2)	500
	220	10.0	10.2	G	190	0.16	EEEHB1E221P	(2)	500
35	10	5.0	5.8	C	28	0.12	EEEHB1V100R	(1)	1000
	22	6.3	5.8	D	55	0.12	EEEHB1V220P	(1)	1000
	33	8.0	6.2	E	84	0.14	EEEHB1V330P	(2)	1000
	47	8.0	10.2	F	98	0.14	EEEHB1V470P	(2)	500
	100	10.0	10.2	G	160	0.14	EEEHB1V101P	(2)	500
50	1	4.0	5.8	B	10	0.12	EEEHB1H1R0R	(1)	2000
	2.2	4.0	5.8	B	16	0.12	EEEHB1H2R2R	(1)	2000
	3.3	4.0	5.8	B	16	0.12	EEEHB1H3R3R	(1)	2000
	4.7	5.0	5.8	C	23	0.12	EEEHB1H4R7R	(1)	1000
	6.8	5.0	5.8	C	23	0.12	EEEHB1H6R8R	(1)	1000
	10	6.3	5.8	D	35	0.12	EEEHB1H100P	(1)	1000
	22	8.0	6.2	E	70	0.12	EEEHB1H220P	(2)	1000
	33	8.0	10.2	F	91	0.12	EEEHB1H330P	(2)	500
	47	10.0	10.2	G	100	0.12	EEEHB1H470P	(2)	500

*1: Ripple current (120 Hz / +105 °C)
*2: tanδ (120 Hz / +20 °C)
・Please refer to the page of “Refl ow Profi le” and “The Taping Dimensions”.
・When requesting vibration-proof product, please put the last “V” instead to “P”

Design and specifications are each subject to change without notice. Ask factory for the current technical specifications before purchase and/or use.
Should a safety concern arise regarding this product, please be sure to contact us immediately.

Characteristics list (Bi-polar)

Endurance : 105 °C 2000 h

Rated voltage (V)	Capacitance (±20 %) (μF)	Case size (mm)		Size code	Specification		Part No.	Reflow	Min. Packaging Q'ty (pcs)
		øD	L		Ripple current*1 (mA rms)	tan δ*2			Taping
6.3	47	6.3	5.8	D	35	0.60	EEEHP0J470P	(1)	1000
10	10	4.0	5.8	B	20	0.44	EEEHP1A100R	(1)	2000
	33	6.3	5.8	D	26	0.44	EEEHP1A330P	(1)	1000
16	10	5.0	5.8	C	25	0.32	EEEHP1C100R	(1)	1000
25	3.3	4.0	5.8	B	12	0.28	EEEHP1E3R3R	(1)	2000
	4.7	4.0	5.8	B	12	0.28	EEEHP1E4R7R	(1)	2000
	10	6.3	5.8	D	28	0.28	EEEHP1E100P	(1)	1000
	22	6.3	5.8	D	55	0.28	EEEHP1E220P	(1)	1000
35	2.2	4.0	5.8	B	10	0.24	EEEHP1V2R2R	(1)	2000
50	1	4.0	5.8	B	10	0.24	EEEHP1H1R0R	(1)	2000
	3.3	6.3	5.8	D	16	0.24	EEEHP1H3R3P	(1)	1000
	4.7	6.3	5.8	D	23	0.24	EEEHP1H4R7P	(1)	1000

Characteristics list (5.5 mm max.)

Not Recommended for New Design

Endurance : 105 °C 2000 h

Rated voltage (V)	Capacitance (±20 %) (μF)	Case size (mm)		Size code	Specification		Part No.	Reflow	Min. Packaging Q'ty (pcs)
		øD	L		Ripple current*1 (mA rms)	tan δ*2			Taping
6.3	22	4.0	5.4	B	26	0.30	EEEHB0J220SR	(1)	2000
	47	5.0	5.4	C	46	0.30	EEEHB0J470SR	(1)	1000
	100	6.3	5.4	D	71	0.30	EEEHB0J101SP	(1)	1000
10	33	5.0	5.4	C	43	0.22	EEEHB1A330SR	(1)	1000
16	10	4.0	5.4	B	28	0.16	EEEHB1C100SR	(1)	2000
	22	5.0	5.4	C	39	0.16	EEEHB1C220SR	(1)	1000
	47	6.3	5.4	D	70	0.16	EEEHB1C470SP	(1)	1000
25	4.7	4.0	5.4	B	22	0.14	EEEHB1E4R7SR	(1)	2000
	6.8	4.0	5.4	B	25	0.14	EEEHB1E6R8SR	(1)	2000
	33	6.3	5.4	D	65	0.14	EEEHB1E330SP	(1)	1000
35	10	5.0	5.4	C	28	0.12	EEEHB1V100SR	(1)	1000
	22	6.3	5.4	D	55	0.12	EEEHB1V220SP	(1)	1000
50	1	4.0	5.4	B	10	0.12	EEEHB1H1R0SR	(1)	2000
	2.2	4.0	5.4	B	16	0.12	EEEHB1H2R2SR	(1)	2000
	3.3	4.0	5.4	B	16	0.12	EEEHB1H3R3SR	(1)	2000
	4.7	5.0	5.4	C	23	0.12	EEEHB1H4R7SR	(1)	1000
	6.8	5.0	5.4	C	23	0.12	EEEHB1H6R8SR	(1)	1000
	10	6.3	5.4	D	35	0.12	EEEHB1H100SP	(1)	1000

*1: Ripple current (120 Hz / +105 °C)
*2: tanδ (120 Hz / +20 °C)
・Please refer to the page of “Refl ow Profi le” and “The Taping Dimensions”.
・When requesting vibration-proof product, please put the last “V” instead to “P”

Panasonic
INDUSTRY

Aluminum Electrolytic Capacitors

Surface Mount Type

HC series

Long life

HC
↑
HB

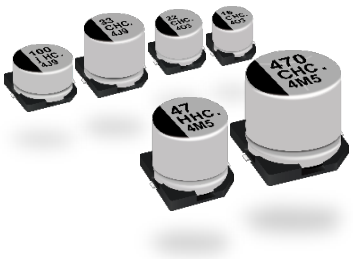

Features

- Endurance : 105 °C 3000 h to 5000 h
- Vibration-proof productt (30G guaranteed) is available upon request（ø8 ≤）
- AEC-Q200 compliant
- RoHS compliant

Specifications

Category temp. range	–40 °C to +105 °C	
Rated voltage range	6.3 V to 50 V	
Capacitance range	1 μF to 1000 μF	
Capacitance tolerance	±20 % (120 Hz / +20 °C)	
Leakage current	I ≤ 0.01 CV or 3 (μA), whichever is greater, 2 minutes after reaching rated voltage, 20 °C *CV = (Capacitance in μF) x (Rated voltage in V)	
Dissipation factor (tan δ)	Please see the attached characteristics list	
Endurance	After applying rated working voltage for 2000 hours at +105 °C ± 2 °C and then being stabilized at +20 °C, capacitors shall meet the following limits. ø4 to ø6.3 (3000 hours After applying rated working voltage) ø8 to ø10 (5000 hours After applying rated working voltage)	
	Capacitance change	Within ±30 % of the initial value
	Dissipation factor (tan δ)	≤ 300 % of the initial limit
	Leakage current	Within the initial limit
Shelf life	After storage for 1000 hours at +105 °C ± 2 °C with no voltage applied and then being stabilized at +20 °C, capacitors shall meet the limits specified in endurance. (Capacitors are left at room temperature and humidity for 2 hours after the test. Then, apply the rated voltage for 30min with a series protection resistance of 1000 Ω ± 10 Ω. Measure electrical characteristics after discharging the capacitor.)	
Resistance to soldering heat	Capacitance change	Within ±10 % of the initial value
	Dissipation factor (tan δ)	Within the initial limit
	Leakage current	Within the initial limit

Frequency correction factor for ripple current

Frequency (Hz)	50, 60	120	1 k	10 k to
Correction factor	0.70	1.00	1.30	1.70

Marking

Example : 6.3 V 22 μF
Marking color : BLACK

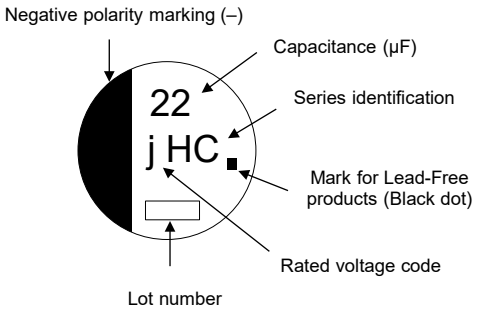

R.voltage code

			Unit : V
j	6.3	E	25
A	10	V	35
C	16	H	50

Dimensions

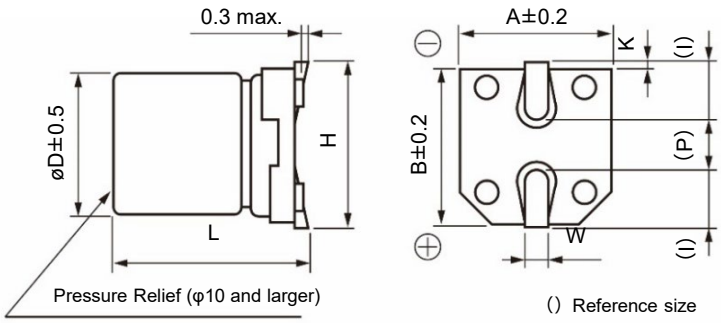

Unit : mm

Size code	øD	L	A, B	H	I	W	P	K
B	4.0	5.8±0.3	4.3	5.5 max.	1.8	0.65±0.1	1.0	$0.35^{+0.15}_{-0.20}$
C	5.0	5.8±0.3	5.3	6.5 max.	2.2	0.65±0.1	1.5	$0.35^{+0.15}_{-0.20}$
D	6.3	5.8±0.3	6.6	7.8 max.	2.6	0.65±0.1	1.8	$0.35^{+0.15}_{-0.20}$
D8	6.3	7.7±0.3	6.6	7.8 max.	2.6	0.65±0.1	1.8	$0.35^{+0.15}_{-0.20}$
F	8.0	10.2±0.3	8.3	10.0 max.	3.4	0.90±0.2	3.1	0.70±0.2
G	10.0	10.2±0.3	10.3	12.0 max.	3.5	0.90±0.2	4.6	0.70±0.2

・The dimensions of the vibration-proof products, please refer to the page of the mounting specification.

Design and specifications are each subject to change without notice. Ask factory for the current technical specifications before purchase and/or use.
Should a safety concern arise regarding this product, please be sure to contact us immediately.

Explanation of part numbers

◇ Part number system

e.g.: EEEHC0J221XP

EEE	HC	0 J	221	X	P
Product classification	Series / Code	Rated voltage (V) / Code	Capacitance (μF) / Code	Special code / Code	Tape width (mm) / Code

HC

Series	Code
HC	HC

0 J

Rated voltage (V)	Code
6.3	0J
10	1A
16	1C
25	1E
35	1V
50	1H

221

Capacitance (μF)	Code	Capacitance (μF)	Code
1	10	47	470
2.2	2R2	100	101
3.3	3R3	220	221
4.7	4R7	330	331
10	100	470	471
22	220	1000	102
33	330		

X

Special code	Code
D8 size	X
Others	–

P

Tape width (mm)	Code
12	R
16, 24	P

Characteristics list

Endurance : 105 °C 3000 h (ø8, ø10 : 5000 h)

Rated voltage (V)	Capacitance (±20 %) (μF)	Case size (mm)		Size code	Specification		Part No.	Reflow	Min. Packaging Q'ty (pcs)
		øD	L		Ripple current*1 (mA rms)	tan δ*2			Taping
6.3	22	4.0	5.8	B	26	0.30	EEEHC0J220R	(1)	2000
	47	5.0	5.8	C	46	0.30	EEEHC0J470R	(1)	1000
	100	6.3	5.8	D	71	0.30	EEEHC0J101P	(1)	1000
	220	6.3	7.7	D8	101	0.30	EEEHC0J221XP	(1)	900
	330	8.0	10.2	F	230	0.30	EEEHC0J331P	(2)	500
	1000	10.0	10.2	G	313	0.50	EEEHC0J102P	(2)	500
10	33	5.0	5.8	C	43	0.26	EEEHC1A330R	(1)	1000
	220	8.0	10.2	F	160	0.26	EEEHC1A221P	(2)	500
16	10	4.0	5.8	B	28	0.20	EEEHC1C100R	(1)	2000
	22	5.0	5.8	C	39	0.20	EEEHC1C220R	(1)	1000
	47	6.3	5.8	D	70	0.20	EEEHC1C470P	(1)	1000
	100	6.3	7.7	D8	81	0.20	EEEHC1C101XP	(1)	900
	470	10.0	10.2	G	340	0.20	EEEHC1C471P	(2)	500
25	33	6.3	5.8	D	65	0.16	EEEHC1E330P	(1)	1000
	47	6.3	7.7	D8	65	0.16	EEEHC1E470XP	(1)	900
	100	8.0	10.2	F	130	0.16	EEEHC1E101P	(2)	500
	330	10.0	10.2	G	238	0.16	EEEHC1E331P	(2)	500
35	4.7	4.0	5.8	B	15	0.14	EEEHC1V4R7R	(1)	2000
	10	5.0	5.8	C	28	0.14	EEEHC1V100R	(1)	1000
	22	6.3	5.8	D	55	0.14	EEEHC1V220P	(1)	1000
	33	6.3	7.7	D8	57	0.14	EEEHC1V330XP	(1)	900
	220	10.0	10.2	G	220	0.14	EEEHC1V221P	(2)	500
50	1	4.0	5.8	B	10	0.12	EEEHC1H1R0R	(1)	2000
	2.2	4.0	5.8	B	16	0.12	EEEHC1H2R2R	(1)	2000
	3.3	4.0	5.8	B	16	0.12	EEEHC1H3R3R	(1)	2000
	4.7	5.0	5.8	C	23	0.12	EEEHC1H4R7R	(1)	1000
	10	6.3	5.8	D	35	0.12	EEEHC1H100P	(1)	1000
	22	6.3	7.7	D8	49	0.12	EEEHC1H220XP	(1)	900
	33	8.0	10.2	F	91	0.12	EEEHC1H330P	(2)	500
	47	8.0	10.2	F	100	0.12	EEEHC1H470P	(2)	500
	100	10.0	10.2	G	160	0.12	EEEHC1H101P	(2)	500

*1: Ripple current (120 Hz / +105 °C)
*2: tanδ (120 Hz / +20 °C)
・Please refer to the page of “Refl ow Profi le” and “The Taping Dimensions”.
・When requesting vibration-proof product, please put the last “V” instead to “P”

Design and specifications are each subject to change without notice. Ask factory for the current technical specifications before purchase and/or use.
Should a safety concern arise regarding this product, please be sure to contact us immediately.

Panasonic
INDUSTRY

Aluminum Electrolytic Capacitors

Surface Mount Type

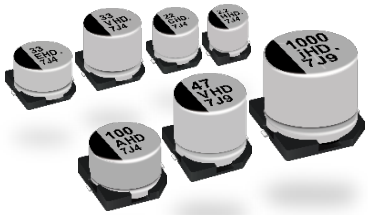

HD series **6.3 V to 35 V : High temperature Lead-Free reflow (suffix : A*)**

50 V to 100 V : Standard Lead-Free reflow

Features

- Endurance : 105 °C 5000 h
- Vibration-proof product (30G guaranteed) is available upon request (ø6.3 ≤)
- AEC-Q200 compliant
- RoHS compliant

Specifications

Category temp. range	–40 °C to +105 °C									
Rated voltage range	6.3 V to 100 V									
Capacitance range	1 μF to 1000 μF									
Capacitance tolerance	±20 % (120 Hz / +20 °C)									
Leakage current	I ≤ 0.01 CV or 3 (μA), whichever is greater, 2 minutes after reaching rated voltage, 20 °C *CV = (Capacitance in μF) x (Rated voltage in V)									
Dissipation factor (tan δ)	Please see the attached characteristics list									
Characteristics at low temperature	Rated voltage (V)	6.3	10	16	25	35	50	63	100	(Impedance ratio at 120 Hz)
	Z (–25 °C) / Z (+20 °C)	3	3	2	2	2	2	2	2	
	Z (–40 °C) / Z (+20 °C)	4	4	3	3	3	3	3	3	
Endurance	After applying rated working voltage for 5000 hours at +105 °C ± 2 °C and then being stabilized at +20 °C, capacitors shall meet the following limits.									
	Capacitance change	Within ±30 % of the initial value								
	Dissipation factor（tan δ)	≤ 300 % of the initial limit								
	Leakage current	Within the initial limit								
Shelf life	After storage for 1000 hours at +105 °C ± 2 °C with no voltage applied and then being stabilized at +20 °C, capacitors shall meet the following limits. (Capacitors are left at room temperature and humidity for 2 hours after the test. Then, apply the rated voltage for 30min with a series protection resistance of 1000 Ω ± 10 Ω. Measure electrical characteristics after discharging the capacitor.)									
	Capacitance change	Within ±20 % of the initial value								
	Dissipation factor（tan δ)	≤ 200 % of the initial limit								
	Leakage current	Within the initial limit								
Resistance to soldering heat	After reflow soldering and then being stabilized at +20 °C, capacitors shall meet the following limits.									
	Capacitance change	Within ±10 % of the initial value								
	Dissipation factor（tan δ)	Within the initial limit								
	Leakage current	Within the initial limit								

Frequency correction factor for ripple current

Frequency (Hz)	50, 60	120	1 k	10 k to
Correction factor	0.70	1.00	1.30	1.70

Marking

Example : 6.3 V 330 μF
Marking color : BLACK

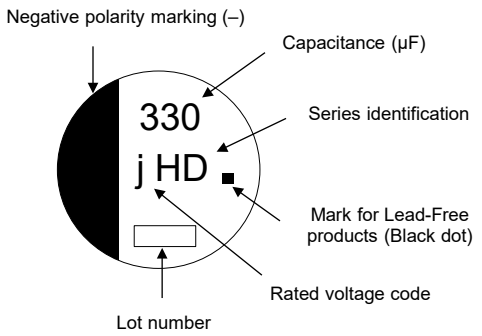

R.voltage code

j	6.3	V	35
A	10	H	50
C	16	J	63
E	25	2A	100

Unit : V

Dimensions

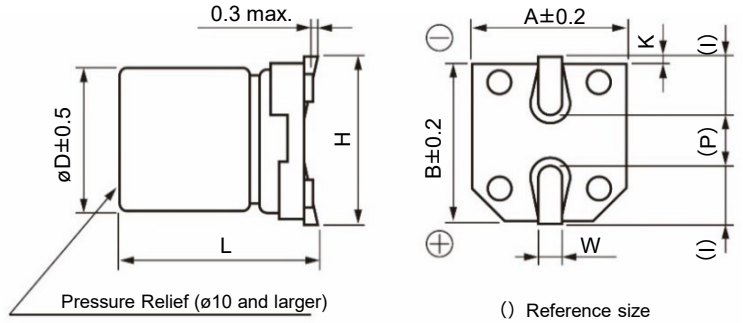

Unit : mm

Size code	øD	L	A, B	H	I	W	P	K
B	4.0	5.8±0.3	4.3	5.5 max.	1.8	0.65±0.1	1.0	$0.35^{+0.15}_{-0.20}$
C	5.0	5.8±0.3	5.3	6.5 max.	2.2	0.65±0.1	1.5	$0.35^{+0.15}_{-0.20}$
D	6.3	5.8±0.3	6.6	7.8 max.	2.6	0.65±0.1	1.8	$0.35^{+0.15}_{-0.20}$
D8	6.3	7.7±0.3	6.6	7.8 max.	2.6	0.65±0.1	1.8	$0.35^{+0.15}_{-0.20}$
E	8.0	6.2±0.3	8.3	9.5 max.	3.4	0.65±0.1	2.2	$0.35^{+0.15}_{-0.20}$
F	8.0	10.2±0.3	8.3	10.0 max.	3.4	0.90±0.2	3.1	0.70±0.2
G	10.0	10.2±0.3	10.3	12.0 max.	3.5	0.90±0.2	4.6	0.70±0.2

・The dimensions of the vibration-proof products, please refer to the page of the mounting specification.

Design and specifications are each subject to change without notice. Ask factory for the current technical specifications before purchase and/or use.
Should a safety concern arise regarding this product, please be sure to contact us immediately.

Explanation of part numbers

◇ Part number system

e.g.: EEEHD0J331AP

EEE	HD	0J	331	A	P
Product classification	Series / Code	Rated voltage (V) / Code*	Capacitance (μF) / Code	Special code / Code	Tape width (mm) / Code

Series	Code
HD	HD

Rated voltage (V)	Code*
6.3	0J(J)
10	1A(A)
16	1C(C)
25	1E(E)
35	1V(V)
50	1H(H)
63	1J
100	2A

Capacitance (μF)	Code	Capacitance (μF)	Code
1	10	47	470
2.2	2R2	100	101
3.3	3R3	220	221
4.7	4R7	330	331
10	100	470	471
22	220	1000	102
33	330		

Special code	Code
High-temperature lead-free reflow	A
D8 size	X
Others	-

(Two codes can be combined)

Tape width (mm)	Code
12	R
16, 24	P

*: The text "0" or "1" is omitted when the part number exceeds 12 figures.
0J →J, 1A→A, 1C→C, 1E→E, 1V→V, 1H→H

Characteristics list

■6.3 V to 35 V (High temperature reflow)

Endurance : 105 °C 5000 h

Rated voltage (V)	Capacitance (±20 %) (μF)	Case size (mm) øD	Case size (mm) L	Size code	Specification: Ripple current*1 (mA rms)	Specification: Impedance*2 (Ω)	Specification: tanδ*3	Part No.	Reflow	Min. Packaging Q'ty (pcs) Taping
6.3	330	8.0	10.2	F	230	1.5	0.30	EEEHD0J331AP	(7)	500
	1000	10.0	10.2	G	313	0.8	0.50	EEEHD0J102AP	(7)	500
10	100	8.0	6.2	E	62	2.0	0.30	EEEHD1A101AP	(7)	1000
	220	8.0	10.2	F	160	1.5	0.30	EEEHD1A221AP	(7)	500
	330	8.0	10.2	F	160	1.5	0.30	EEEHD1A331AP	(7)	500
16	10	4.0	5.8	B	28	12.0	0.20	EEEHD1C100AR	(5)	2000
	22	5.0	5.8	C	39	7.2	0.20	EEEHD1C220AR	(5)	1000
	47	6.3	5.8	D	70	4.0	0.20	EEEHD1C470AP	(5)	1000
	100	8.0	10.2	F	130	1.5	0.20	EEEHD1C101AP	(7)	500
	220	10.0	10.2	G	220	0.8	0.20	EEEHD1C221AP	(7)	500
	470	10.0	10.2	G	340	0.8	0.20	EEEHD1C471AP	(7)	500
25	4.7	4.0	5.8	B	17	12.0	0.16	EEEHD1E4R7AR	(5)	2000
	10	5.0	5.8	C	28	7.2	0.16	EEEHD1E100AR	(5)	1000
	22	6.3	5.8	D	55	4.0	0.16	EEEHD1E220AP	(5)	1000
	33	6.3	5.8	D	55	4.0	0.16	EEEHD1E330AP	(5)	1000
	47	8.0	6.2	E	56	2.0	0.18	EEEHD1E470AP	(7)	1000
	100	8.0	10.2	F	130	1.5	0.16	EEEHD1E101AP	(7)	500
	330	10.0	10.2	G	238	0.8	0.16	EEEHD1E331AP	(7)	500
35	4.7	4.0	5.8	B	17	12.0	0.13	EEEHD1V4R7AR	(5)	2000
	10	5.0	5.8	C	28	7.2	0.13	EEEHD1V100AR	(5)	1000
	22	6.3	5.8	D	55	4.0	0.13	EEEHD1V220AP	(5)	1000
	33	8.0	6.2	E	53	2.0	0.16	EEEHD1V330AP	(7)	1000
		6.3	7.7	D8	57	2.0	0.13	EEEHDV330XAP	(5)	900
	47	6.3	7.7	D8	57	2.0	0.14	EEEHDV470XAP	(5)	900
		8.0	10.2	F	79	1.5	0.14	EEEHD1V470AP	(7)	500
	100	10.0	10.2	G	101	0.8	0.14	EEEHD1V101AP	(7)	500
	220	10.0	10.2	G	220	0.8	0.14	EEEHD1V221AP	(7)	500

*1: Ripple current (120 Hz / +105 °C)
*2: Impedance (100 kHz / +20 °C)
*3: tan δ (120 Hz / +20 °C)
・Please refer to the page of "Reflow Profile" and "The Taping Dimensions".
・When requesting vibration-proof product, please put the last "V" instead to "P"

Design and specifications are each subject to change without notice. Ask factory for the current technical specifications before purchase and/or use.
Should a safety concern arise regarding this product, please be sure to contact us immediately.

Characteristics list

■ 50 V to 100 V (Standard reflow)

Endurance : 105 °C 5000 h

Rated voltage (V)	Capacitance (±20 %) (μF)	Case size (mm)		Size code	Specification			Part No.	Reflow	Min. Packaging Q'ty (pcs)
		øD	L		Ripple current*1 (mA rms)	Impedance*2 (Ω)	tanδ*3			Taping
50	1	4.0	5.8	B	7	12.0	0.12	EEEHD1H1R0R	(1)	2000
	2.2	4.0	5.8	B	12	12.0	0.12	EEEHD1H2R2R	(1)	2000
	3.3	4.0	5.8	B	16	12.0	0.12	EEEHD1H3R3R	(1)	2000
	4.7	5.0	5.8	C	21	7.2	0.12	EEEHD1H4R7R	(1)	1000
	10	6.3	5.8	D	33	4.0	0.12	EEEHD1H100P	(1)	1000
	22	8.0	6.2	E	50	2.0	0.14	EEEHD1H220P	(2)	1000
	33	8.0	10.2	F	74	1.5	0.14	EEEHD1H330P	(2)	500
	47	10.0	10.2	G	94	0.8	0.14	EEEHD1H470P	(2)	500
	100	10.0	10.2	G	94	0.8	0.14	EEEHD1H101P	(2)	500
63	10	8.0	6.2	E	45	2.0	0.18	EEEHD1J100P	(2)	1000
	22	8.0	10.2	F	65	1.5	0.18	EEEHD1J220P	(2)	500
	33	10.0	10.2	G	80	0.8	0.18	EEEHD1J330P	(2)	500
100	10	8.0	10.2	F	55	1.5	0.18	EEEHD2A100P	(2)	500
	22	10.0	10.2	G	70	0.8	0.18	EEEHD2A220P	(2)	500

*1: Ripple current (120 Hz / +105 °C)
*2: Impedance (100 kHz / +20 °C)
*3: tan δ (120 Hz / +20 °C)
・Please refer to the page of "Reflow Profile" and "The Taping Dimensions".
・When requesting vibration-proof product, please put the last “V” instead to “P”

Design and specifications are each subject to change without notice. Ask factory for the current technical specifications before purchase and/or use.
Should a safety concern arise regarding this product, please be sure to contact us immediately.

Panasonic
INDUSTRY

Aluminum Electrolytic Capacitors

Surface Mount Type

HD series (Medium-size)

High temperature Lead-Free reflow (suffix : A∗)

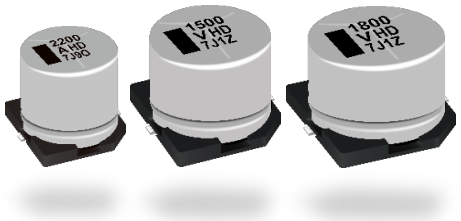

Features

- Endurance : 105 °C 5000 h
- Vibration-proof product (30G guaranteed) is available upon request
- AEC-Q200 compliant
- RoHS compliant

Specifications

Category temp. range	–55 °C to +105 °C	
Rated voltage range	6.3 V to 35 V	
Capacitance range	680 µF to 7500 µF	
Capacitance tolerance	±20 % (120 Hz / +20 °C)	
Leakage current	I ≤ 0.01 CV (µA) After 2 minutes	
Dissipation factor (tan δ)	Please see the attached characteristics list	
Endurance	After applying rated working voltage for 5000 hours at +105 °C ± 2 °C and then being stabilized at +20 °C, capacitors shall meet the following limits.	
	Capacitance change	Within ±30 % of the initial value
	Dissipation factor (tan δ)	≤ 200 % of the initial limit
	Leakage current	Within the initial limit
Shelf life	After storage for 1000 hours at +105 °C ± 2 °C with no voltage applied and then being stabilized at +20 °C, capacitors shall meet the limits specified in endurance. (Capacitors are left at room temperature and humidity for 2 hours after the test. Then, apply the rated voltage for 30min with a series protection resistance of 1000 Ω ± 10 Ω. Measure electrical characteristics after discharging the capacitor.)	
Resistance to soldering heat	After reflow soldering and then being stabilized at +20 °C, capacitors shall meet the following limits.	
	Capacitance change	Within ±10 % of the initial value
	Dissipation factor (tan δ)	Within the initial limit
	Leakage current	Within the initial limit

Frequency correction factor for ripple current

Cap. (µF) \ Freq. (Hz)	60	120	1 k	10 k	100 k to
680 to 1000	0.93	1.00	1.20	1.27	1.33
1500 to 2200	0.94	1.00	1.13	1.19	1.25
3300 to 7500	0.94	1.00	1.12	1.18	1.18

Marking

Example : 6.3 V 3300 µF
Marking color : BLACK

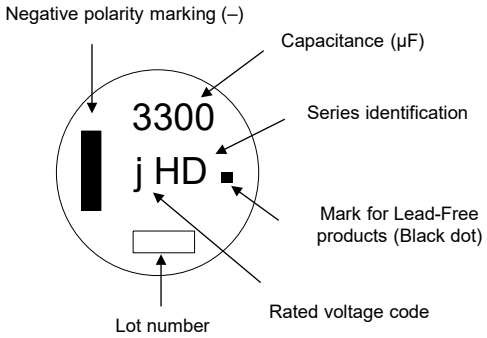

R.voltage code

j	6.3
A	10
C	16

Unit : V

E	25
V	35

Dimensions

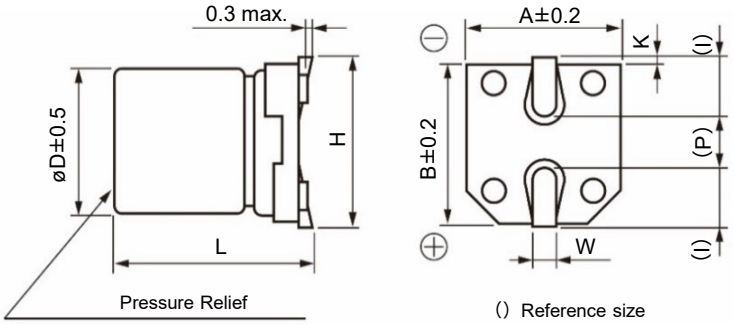

Unit : mm

Size code	øD	L	A、B	H	I	W	P	K
H13	12.5	13.5±0.5	13.5	15.0 max.	4.7	0.90±0.3	4.4	0.70±0.3
J16	16.0	16.5±0.5	17.0	19.0 max.	5.5	1.20±0.3	6.7	0.70±0.3
K16	18.0	16.5±0.5	19.0	21.0 max.	6.7	1.20±0.3	6.7	0.70±0.3

・The dimensions of the vibration-proof products, please refer to the page of the mounting specification.

Design and specifications are each subject to change without notice. Ask factory for the current technical specifications before purchase and/or use.
Should a safety concern arise regarding this product, please be sure to contact us immediately.

Explanation of part numbers

◇ Part number system

e.g.: EEEHD0J332AQ

EEE	HD	0J	332	A	Q
Product classification	Series / Code	Rated voltage (V) / Code	Capacitance (μF) / Code	Special code / Code	Tape width (mm) / Code

HD

Series	Code
HD	HD

0J

Rated voltage (V)	Code
6.3	0J
10	1A
16	1C
25	1E
35	1V

332

Capacitance (μF)	Code	Capacitance (μF)	Code
680	681	3300	332
1000	102	4700	472
1500	152	6800	682
1800	182	7500	752
2200	222		

A

Special code	Code
High-temperature lead-free reflow	A

Q

Tape width (mm)	Code
32	Q
44	M

Characteristics list

Endurance : 105 °C 5000 h

Rated voltage (V)	Capacitance (±20 %) (μF)	Case size (mm)		Size code	Specification		Part No.	Reflow	Min. Packaging Q'ty (pcs)
		øD	L		Ripple current*1 (mA rms)	tan δ*2			Taping
6.3	3300	12.5	13.5	H13	680	0.32	EEEHD0J332AQ	(9)	200
	6800	16.0	16.5	J16	1280	0.38	EEEHD0J682AM	(9)	125
	7500	18.0	16.5	K16	1540	0.40	EEEHD0J752AM	(9)	125
10	2200	12.5	13.5	H13	620	0.24	EEEHD1A222AQ	(9)	200
	4700	16.0	16.5	J16	1280	0.28	EEEHD1A472AM	(9)	125
	6800	18.0	16.5	K16	1540	0.32	EEEHD1A682AM	(9)	125
16	1500	12.5	13.5	H13	620	0.18	EEEHD1C152AQ	(9)	200
	3300	16.0	16.5	J16	1280	0.22	EEEHD1C332AM	(9)	125
	4700	18.0	16.5	K16	1540	0.24	EEEHD1C472AM	(9)	125
25	1000	12.5	13.5	H13	580	0.16	EEEHD1E102AQ	(9)	200
	2200	16.0	16.5	J16	1200	0.18	EEEHD1E222AM	(9)	125
	3300	18.0	16.5	K16	1540	0.20	EEEHD1E332AM	(9)	125
35	680	12.5	13.5	H13	580	0.14	EEEHD1V681AQ	(9)	200
	1500	16.0	16.5	J16	1200	0.16	EEEHD1V152AM	(9)	125
	1800	18.0	16.5	K16	1450	0.16	EEEHD1V182AM	(9)	125

*1: Ripple current (120 Hz / +105 °C)
*2: tan δ (120 Hz / +20 °C)
・Please refer to the page of "Reflow Profile" and "The Taping Dimensions".
・When requesting vibration-proof product, please put the last “V” instead to “Q” or “M”

Design and specifications are each subject to change without notice. Ask factory for the current technical specifications before purchase and/or use.
Should a safety concern arise regarding this product, please be sure to contact us immediately.

Panasonic INDUSTRY

⚠ This series is not a recommended product.
Not recommended for new design.

Aluminum Electrolytic Capacitors

Surface Mount Type

FC series **High temperature Lead-Free reflow (suffix : A∗)**

Low impedance
FC
↑
HA

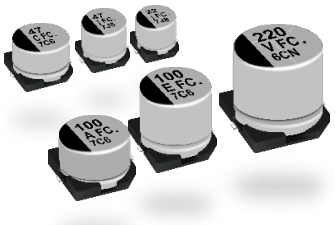

Features

- Endurance : 105 °C 1000 h
- Low impedance (1/2 for HA series)
- Vibration-proof product (30G guaranteed) is available upon request (ø8 ≤)
- AEC-Q200 compliant
- RoHS compliant

Category temp. range	–40 °C to +105 °C						
Rated voltage range	6.3 V to 35 V						
Capacitance range	1 μF to 1500 μF						
Capacitance tolerance	±20 % (120 Hz / +20°C)						
Leakage current	I ≤ 0.01 CV or 3 (μA), whichever is greater, 2 minutes after reaching rated voltage, 20 °C *CV = (Capacitance in μF) x (Rated voltage in V)						
Dissipation factor (tan δ)	Please see the attached characteristics list						
Characteristics at low temperature	Rated voltage (V)	6.3	10	16	25	35	(Impedance ratio at 120 Hz)
	Z (-25 °C) / Z (+20 °C)	2	2	2	2	2	
	Z (-40 °C) / Z (+20 °C)	3	3	3	3	3	
Endurance	After applying rated working voltage for 1000 hours at +105 °C ± 2 °C and then being stabilized at +20 °C, capacitors shall meet the following limits.						
	Capacitance change	Within ±20 % of the initial value					
	Dissipation factor (tan δ)	≤ 200 % of the initial limit					
	DC leakege current	Within the initial limit					
Shelf life	After storage for 1000 hours at +105 °C ± 2 °C with no voltage applied and then being stabilized at +20 °C, capacitors shall meet the limits specified in endurance. (Capacitors are left at room temperature and humidity for 2 hours after the test. Then, apply the rated voltage for 30min with a series protection resistance of 1000 Ω ± 10 Ω. Measure electrical characteristics after discharging the capacitor.)						
Resistance to soldering heat	After reflow soldering and then being stabilized at +20 °C, capacitors shall meet the following limits.						
	Capacitance change	Within ±10 % of the initial value					
	Dissipation factor (tan δ)	Within the initial limit					
	DC leakege current	Within the initial limit					

Frequency correction factor for ripple current

Frequency (Hz)	50, 60	120	1 k	10 k ～	100 k to
Correction factor	0.70	0.75	0.90	0.95	1.00

Marking

Example : 6.3 V 22 μF
Marking color : BLACK

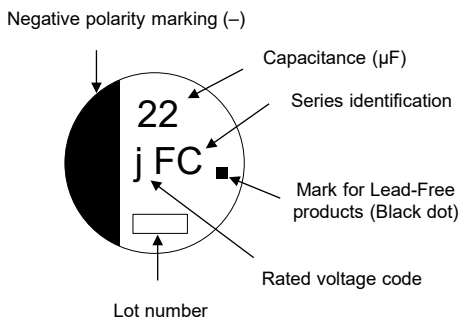

R.voltage code

j	6.3	E	25
A	10	V	35
C	16		

Unit : V

Dimensions

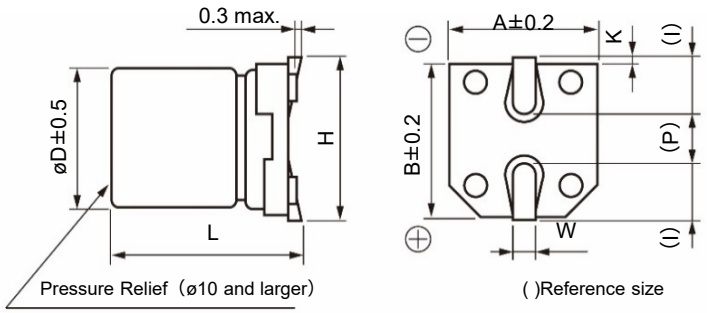

Unit : mm

Size code	øD	L	A, B	H	I	W	P	K
B	4.0	5.4 $^{+0.1}_{-0.2}$	4.3	5.5 max.	1.8	0.65±0.1	1.0	0.35 $^{+0.15}_{-0.20}$
C	5.0	5.4 $^{+0.1}_{-0.2}$	5.3	6.5 max.	2.2	0.65±0.1	1.5	0.35 $^{+0.15}_{-0.20}$
D	6.3	5.4 $^{+0.1}_{-0.2}$	6.6	7.8 max.	2.6	0.65±0.1	1.8	0.35 $^{+0.15}_{-0.20}$
E	8.0	6.2±0.3	8.3	9.5 max.	3.4	0.65±0.1	2.2	0.35 $^{+0.15}_{-0.20}$
F	8.0	10.2±0.3	8.3	10.0 max.	3.4	0.90±0.2	3.1	0.70±0.2
G	10.0	10.2±0.3	10.3	12.0 max.	3.5	0.90±0.2	4.6	0.70±0.2

・The dimensions of the vibration-proof products, please refer to the page of the mounting specification.

Design and specifications are each subject to change without notice. Ask factory for the current technical specifications before purchase and/or use.
Should a safety concern arise regarding this product, please be sure to contact us immediately.

Explanation of part numbers

◇ Part number system

e.g.: EEEFC0J220AR

EEE	FC	0 J	220	A	R
Product classification	Series / Code	Rated voltage (V) / Code	Capacitance (μF) / Code	Special code / Code	Tape width (mm) / Code

FC

Series	Code
FC	FC

0 J

Rated voltage (V)	Code
6.3	0J
10	1A
16	1C
25	1E
35	1V

220

Capacitance (μF)	Code	Capacitance (μF)	Code
1	10	47	470
2.2	2R2	68	680
3.3	3R3	100	101
4.7	4R7	150	151
6.8	6R8	220	221
10	100	330	331
22	220	470	471
33	330	1500	152

A

Special code	Code
High-temperature lead-free reflow	A

R

Tape width (mm)	Code
12	R
16, 24	P

Characteristics list

Endurance : 105 °C 1000 h

Rated voltage (V)	Capacitance (±20 %) (μF)	Case size (mm) øD	Case size (mm) L	Size code	Specification: Ripple current*1 (mA rms)	Specification: Impedance*2 (Ω)	Specification: tanδ*3	Part No.	Reflow	Min. Packaging Q'ty (pcs) Taping
6.3	22	4.0	5.4	B	60	3.00	0.26	EEEFC0J220AR	(5)	2000
	47	5.0	5.4	C	95	1.80	0.26	EEEFC0J470AR	(5)	1000
	68	6.3	5.4	D	140	1.00	0.26	EEEFC0J680AP	(5)	1000
	100	6.3	5.4	D	140	1.00	0.26	EEEFC0J101AP	(5)	1000
	220	8.0	6.2	E	230	0.40	0.26	EEEFC0J221AP	(6)	1000
	330	8.0	10.2	F	450	0.30	0.26	EEEFC0J331AP	(6)	500
	1000	10.0	10.2	G	670	0.15	0.26	EEEFC0J102AP	(6)	500
	1500	10.0	10.2	G	670	0.15	0.26	EEEFC0J152AP	(6)	500
10	33	5.0	5.4	C	95	1.80	0.19	EEEFC1A330AR	(5)	1000
	100	8.0	6.2	E	230	0.40	0.19	EEEFC1A101AP	(6)	1000
	150	8.0	6.2	E	230	0.40	0.19	EEEFC1A151AP	(6)	1000
	220	8.0	10.2	F	450	0.30	0.19	EEEFC1A221AP	(6)	500
	470	10.0	10.2	G	670	0.15	0.19	EEEFC1A471AP	(6)	500
	1000	10.0	10.2	G	670	0.15	0.19	EEEFC1A102AP	(6)	500
16	10	4.0	5.4	B	60	3.00	0.16	EEEFC1C100AR	(5)	2000
	22	5.0	5.4	C	95	1.80	0.16	EEEFC1C220AR	(5)	1000
	47	6.3	5.4	D	140	1.00	0.16	EEEFC1C470AP	(5)	1000
	68	8.0	6.2	E	230	0.40	0.16	EEEFC1C680AP	(6)	1000
	100	8.0	6.2	E	230	0.40	0.16	EEEFC1C101AP	(6)	1000
	220	10.0	10.2	G	670	0.15	0.16	EEEFC1C221AP	(6)	500
	330	10.0	10.2	G	670	0.15	0.16	EEEFC1C331AP	(6)	500
	470	10.0	10.2	G	670	0.15	0.16	EEEFC1C471AP	(6)	500
	680	10.0	10.2	G	670	0.15	0.16	EEEFC1C681AP	(6)	500
25	6.8	4.0	5.4	B	60	3.00	0.14	EEEFC1E6R8AR	(5)	2000
	22	6.3	5.4	D	140	1.00	0.14	EEEFC1E220AP	(5)	1000
	33	6.3	5.4	D	140	1.00	0.14	EEEFC1E330AP	(5)	1000
	47	8.0	6.2	E	230	0.40	0.14	EEEFC1E470AP	(6)	1000
	68	8.0	10.2	F	450	0.30	0.14	EEEFC1E680AP	(6)	500
	100	8.0	10.2	F	450	0.30	0.14	EEEFC1E101AP	(6)	500
	220	10.0	10.2	G	670	0.15	0.14	EEEFC1E221AP	(6)	500
	330	10.0	10.2	G	670	0.15	0.14	EEEFC1E331AP	(6)	500
	470	10.0	10.2	G	670	0.15	0.14	EEEFC1E471AP	(6)	500
35	1	4.0	5.4	B	60	3.00	0.12	EEEFC1V1R0AR	(5)	2000
	2.2	4.0	5.4	B	60	3.00	0.12	EEEFC1V2R2AR	(5)	2000
	3.3	4.0	5.4	B	60	3.00	0.12	EEEFC1V3R3AR	(5)	2000
	4.7	4.0	5.4	B	60	3.00	0.12	EEEFC1V4R7AR	(5)	2000
	6.8	5.0	5.4	C	95	1.80	0.12	EEEFC1V6R8AR	(5)	1000
	10	5.0	5.4	C	95	1.80	0.12	EEEFC1V100AR	(5)	1000
	22	6.3	5.4	D	140	1.00	0.12	EEEFC1V220AP	(5)	1000
	33	8.0	6.2	E	230	0.40	0.12	EEEFC1V330AP	(6)	1000
	47	8.0	6.2	E	230	0.40	0.12	EEEFC1V470AP	(6)	1000
	100	10.0	10.2	G	670	0.15	0.12	EEEFC1V101AP	(6)	500
	220	10.0	10.2	G	670	0.15	0.12	EEEFC1V221AP	(6)	500
	330	10.0	10.2	G	670	0.15	0.12	EEEFC1V331AP	(6)	500

*1: Ripple current (100 kHz / +105 °C)　*2: Impedance (100 kHz / +20 °C)　*3: tanδ (120 Hz / +20 °C)

・Please refer to the page of “Refl ow Profi le” and “The Taping Dimensions”.

・When requesting vibration-proof product, please put the last “V” instead to “P”

Design and specifications are each subject to change without notice. Ask factory for the current technical specifications before purchase and/or use.
Should a safety concern arise regarding this product, please be sure to contact us immediately.

Panasonic INDUSTRY

This series is not a recommended product.
Not recommended for new design.

Aluminum Electrolytic Capacitors

Surface Mount Type

FC series

Low impedance

FC

↑

HA

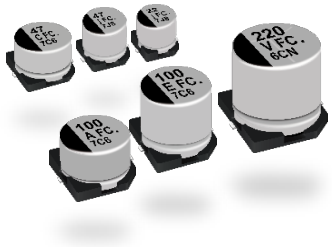

Features

- Endurance : 105 °C 1000 h
- Low impedance (1/2 for HA series)
- Vibration-proof product (30G guaranteed) is available upon request (ø8 ≤)
- AEC-Q200 compliant
- RoHS compliant

Specifications

Category temp. range	–40 °C to +105 °C							
Rated voltage range	6.3 V to 50 V							
Capacitance range	1 µF to 1500 µF							
Capacitance tolerance	±20 % (120 Hz / +20°C)							
Leakage current	I ≤ 0.01 CV or 3 (µA), whichever is greater, 2 minutes after reaching rated voltage, 20 °C *CV = (Capacitance in µF) x (Rated voltage in V)							
Dissipation factor (tan δ)	Please see the attached characteristics list							
Characteristics at low temperature	Rated voltage (V)	6.3	10	16	25	35	50	(Impedance ratio at 120 Hz)
	Z (-25 °C) / Z (+20 °C)	2	2	2	2	2	2	
	Z (-40 °C) / Z (+20 °C)	3	3	3	3	3	3	
Endurance	After applying rated working voltage for 1000 hours at +105 °C ± 2 °C and then being stabilized at +20 °C, capacitors shall meet the following limits.							
	Capacitance change	Within ±20 % of the initial value						
	Dissipation factor (tan δ)	≤ 200 % of the initial limit						
	DC leakege current	Within the initial limit						
Shelf life	After storage for 1000 hours at +105 °C ± 2 °C with no voltage applied and then being stabilized at +20 °C, capacitors shall meet the limits specified in endurance. (Capacitors are left at room temperature and humidity for 2 hours after the test. Then, apply the rated voltage for 30min with a series protection resistance of 1000 Ω ± 10 Ω. Measure electrical characteristics after discharging the capacitor.)							
Resistance to soldering heat	After reflow soldering and then being stabilized at +20 °C, capacitors shall meet the following limits.							
	Capacitance change	Within ±10 % of the initial value						
	Dissipation factor (tan δ)	Within the initial limit						
	DC leakege current	Within the initial limit						

Frequency correction factor for ripple current

Frequency (Hz)	50, 60	120	1 k	10 k to	100 k to
Correction factor	0.70	0.75	0.90	0.95	1.00

Marking

Example : 6.3 V 22 µF
Marking color : BLACK

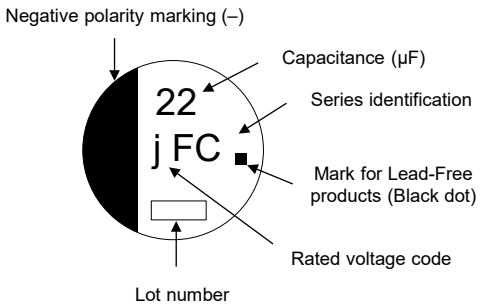

R.voltage code

Unit : V

j	6.3	E	25
A	10	V	35
C	16	H	50

Dimensions

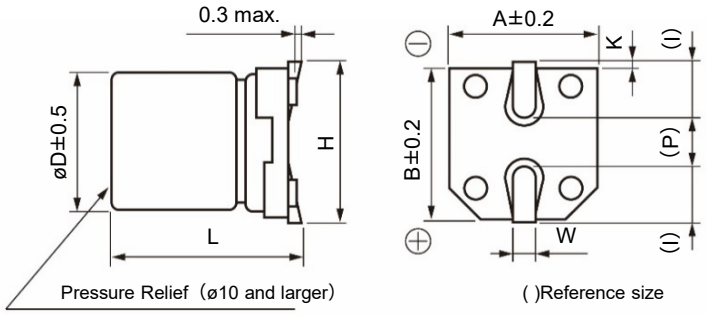

Unit : mm

Size code	øD	L	A, B	H	I	W	P	K
B	4.0	5.4 $^{+0.1}_{-0.2}$	4.3	5.5 max.	1.8	0.65±0.1	1.0	0.35 $^{+0.15}_{-0.20}$
C	5.0	5.4 $^{+0.1}_{-0.2}$	5.3	6.5 max.	2.2	0.65±0.1	1.5	0.35 $^{+0.15}_{-0.20}$
D	6.3	5.4 $^{+0.1}_{-0.2}$	6.6	7.8 max.	2.6	0.65±0.1	1.8	0.35 $^{+0.15}_{-0.20}$
E	8.0	6.2±0.3	8.3	9.5 max.	3.4	0.65±0.1	2.2	0.35 $^{+0.15}_{-0.20}$
F	8.0	10.2±0.3	8.3	10.0 max.	3.4	0.90±0.2	3.1	0.70±0.2
G	10.0	10.2±0.3	10.3	12.0 max.	3.5	0.90±0.2	4.6	0.70±0.2

・The dimensions of the vibration-proof products, please refer to the page of the mounting specification.

Design and specifications are each subject to change without notice. Ask factory for the current technical specifications before purchase and/or use.
Should a safety concern arise regarding this product, please be sure to contact us immediately.

Explanation of part numbers

◇ Part number system

e.g.: EEEFC0J221P

EEE	FC	0 J	221	P
Product classification	Series / Code	Rated voltage (V) / Code	Capacitance (μF) / Code	Tape width (mm) / Code

Series	Code
FC	FC

Rated voltage (V)	Code
6.3	0J
10	1A
16	1C
25	1E
35	1V
50	1H

Capacitance (μF)	Code	Capacitance (μF)	Code	Capacitance (μF)	Code
1	10	22	220	220	221
2.2	2R2	33	330	330	331
3.3	3R3	47	470	470	471
4.7	4R7	68	680	680	681
6.8	6R8	100	101	1000	102
10	220	150	151	1500	152

Tape width (mm)	Code
12	R
16, 24	P

Characteristics list

Rated voltage (V)	Capacitance (±20 %) (μF)	Case size (mm) øD	Case size (mm) L	Size code	Specification: Ripple current*1 (mA rms)	Specification: Impedance*2 (Ω)	Specification: tanδ*3	Part No.	Reflow	Min. Packaging Q'ty (pcs) Taping
6.3	22	4.0	5.4	B	60	3.00	0.26	EEEFC0J220R	(1)	2000
	47	5.0	5.4	C	95	1.80	0.26	EEEFC0J470R	(1)	1000
	68	6.3	5.4	D	140	1.00	0.26	EEEFC0J680P	(1)	1000
	100	6.3	5.4	D	140	1.00	0.26	EEEFC0J101P	(1)	1000
	220	8.0	6.2	E	230	0.40	0.26	EEEFC0J221P	(2)	1000
	330	8.0	10.2	F	450	0.30	0.26	EEEFC0J331P	(2)	500
	1000	10.0	10.2	G	670	0.15	0.26	EEEFC0J102P	(2)	500
	1500	10.0	10.2	G	670	0.15	0.26	EEEFC0J152P	(2)	500
10	33	5.0	5.4	C	95	1.80	0.19	EEEFC1A330R	(1)	1000
	100	8.0	6.2	E	230	0.40	0.19	EEEFC1A101P	(2)	1000
	150	8.0	6.2	E	230	0.40	0.19	EEEFC1A151P	(2)	1000
	220	8.0	10.2	F	450	0.30	0.19	EEEFC1A221P	(2)	500
	470	10.0	10.2	G	670	0.15	0.19	EEEFC1A471P	(2)	500
	1000	10.0	10.2	G	670	0.15	0.19	EEEFC1A102P	(2)	500
16	10	4.0	5.4	B	60	3.00	0.16	EEEFC1C100R	(1)	2000
	22	5.0	5.4	C	95	1.80	0.16	EEEFC1C220R	(1)	1000
	47	6.3	5.4	D	140	1.00	0.16	EEEFC1C470P	(1)	1000
	68	8.0	6.2	E	230	0.40	0.16	EEEFC1C680P	(2)	1000
	100	8.0	6.2	E	230	0.40	0.16	EEEFC1C101P	(2)	1000
	220	10.0	10.2	G	670	0.15	0.16	EEEFC1C221P	(2)	500
	330	10.0	10.2	G	670	0.15	0.16	EEEFC1C331P	(2)	500
	470	10.0	10.2	G	670	0.15	0.16	EEEFC1C471P	(2)	500
	680	10.0	10.2	G	670	0.15	0.16	EEEFC1C681P	(2)	500
25	6.8	4.0	5.4	B	60	3.00	0.14	EEEFC1E6R8R	(1)	2000
	22	6.3	5.4	D	140	1.00	0.14	EEEFC1E220P	(1)	1000
	33	6.3	5.4	D	140	1.00	0.14	EEEFC1E330P	(1)	1000
	47	8.0	6.2	E	230	0.40	0.14	EEEFC1E470P	(2)	1000
	68	8.0	10.2	F	450	0.30	0.14	EEEFC1E680P	(2)	500
	100	8.0	10.2	F	450	0.30	0.14	EEEFC1E101P	(2)	500
	220	10.0	10.2	G	670	0.15	0.14	EEEFC1E221P	(2)	500
	330	10.0	10.2	G	670	0.15	0.14	EEEFC1E331P	(2)	500
	470	10.0	10.2	G	670	0.15	0.14	EEEFC1E471P	(2)	500

*1: Ripple current (100 kHz / +105 °C)
*2: Impedance (100 kHz / +20 °C)
*3: tanδ (120 Hz / +20 °C)
・Please refer to the page of “Refl ow Profi le” and “The Taping Dimensions”.
・When requesting vibration-proof product, please put the last “V” instead to “P”

Design and specifications are each subject to change without notice. Ask factory for the current technical specifications before purchase and/or use.
Should a safety concern arise regarding this product, please be sure to contact us immediately.

Characteristics list

Rated voltage (V)	Capacitance (±20 %) (μF)	Case size (mm)		Size code	Specification			Part No.	Reflow	Min. Packaging Q'ty (pcs)
		øD	L		Ripple current*1 (mA rms)	Impedance*2 (Ω)	tanδ*3			Taping
35	1	4.0	5.4	B	60	3.00	0.12	EEEFC1V1R0R	(1)	2000
	2.2	4.0	5.4	B	60	3.00	0.12	EEEFC1V2R2R	(1)	2000
	3.3	4.0	5.4	B	60	3.00	0.12	EEEFC1V3R3R	(1)	2000
	4.7	4.0	5.4	B	60	3.00	0.12	EEEFC1V4R7R	(1)	2000
	6.8	5.0	5.4	C	95	1.80	0.12	EEEFC1V6R8R	(1)	1000
	10	5.0	5.4	C	95	1.80	0.12	EEEFC1V100R	(1)	1000
	22	6.3	5.4	D	140	1.00	0.12	EEEFC1V220P	(1)	1000
	33	8.0	6.2	E	230	0.40	0.12	EEEFC1V330P	(2)	1000
	47	8.0	6.2	E	230	0.40	0.12	EEEFC1V470P	(2)	1000
	100	10.0	10.2	G	670	0.15	0.12	EEEFC1V101P	(2)	500
	220	10.0	10.2	G	670	0.15	0.12	EEEFC1V221P	(2)	500
	330	10.0	10.2	G	670	0.15	0.12	EEEFC1V331P	(2)	500
50	1	4.0	5.4	B	30	5.00	0.12	EEEFC1H1R0R	(1)	2000
	2.2	4.0	5.4	B	30	5.00	0.12	EEEFC1H2R2R	(1)	2000
	3.3	4.0	5.4	B	30	5.00	0.12	EEEFC1H3R3R	(1)	2000
	4.7	5.0	5.4	C	50	3.00	0.12	EEEFC1H4R7R	(1)	1000
	10	6.3	5.4	D	70	2.00	0.12	EEEFC1H100P	(1)	1000
	22	8.0	6.2	E	120	0.70	0.12	EEEFC1H220P	(2)	1000
	33	8.0	10.2	F	300	0.60	0.12	EEEFC1H330P	(2)	500
	47	10.0	10.2	G	500	0.30	0.12	EEEFC1H470P	(2)	500
	100	10.0	10.2	G	500	0.30	0.12	EEEFC1H101P	(2)	500
	220	10	10.2	G	500	0.30	0.12	EEEFC1H221P	(2)	500

*1: Ripple current (100 kHz / +105 °C)
*2: Impedance (100 kHz / +20 °C)
*3: tanδ (120 Hz / +20 °C)
・Please refer to the page of “Refl ow Profi le” and “The Taping Dimensions”.
・When requesting vibration-proof product, please put the last “V” instead to “P”

Panasonic
INDUSTRY

Aluminum Electrolytic Capacitors

Surface Mount Type

FK series

High temperature Lead-Free reflow (suffix : A*)

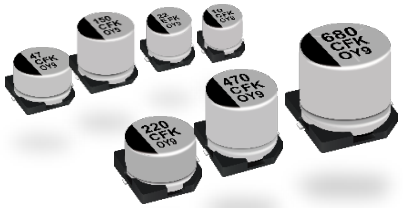

Features

- Endurance : 105 °C 2000 h
- Low impedance (40 % to 60 % less than FC series)
- Miniaturized (30 % to 50 % less than FC series)
- Vibration-proof product (30G guaranteed) is available upon request（ø6.3 ≤）
- AEC-Q200 compliant
- RoHS compliant

Specifications

Category temp. range	–55 °C to +105 °C						
Rated voltage range	6.3 V to 35 V						
Capacitance range	4.7 µF to 1500 µF						
Capacitance tolerance	±20 % (120 Hz / +20 °C)						
Leakage current	I ≤ 0.01 CV or 3 (µA), whichever is greater, 2 minutes after reaching rated voltage, 20 °C *CV = (Capacitance in µF) x (Rated voltage in V)						
Dissipation factor (tan δ)	Please see the attached characteristics list						
Characteristics at low temperature	Rated voltage (V)	6.3	10	16	25	35	(Impedance ratio at 120 Hz)
	Z (–25 °C) / Z (+20 °C)	2	2	2	2	2	
	Z (–40 °C) / Z (+20 °C)	3	3	3	3	3	
	Z (–55 °C) / Z (+20 °C)	4	4	4	3	3	
Endurance	After applying rated working voltage for 2000 hours at +105 °C ± 2 °C and then being stabilized at +20 °C, capacitors shall meet the following limits.						
	Capacitance change	Within ±30 % of the initial value					
	Dissipation factor (tan δ)	≤ 200 % of the initial limit					
	Leakage current	Within the initial limit					
Shelf life	After storage for 1000 hours at +105 °C ± 2 °C with no voltage applied and then being stabilized at +20 °C, capacitors shall meet the limits specified in endurance. (Capacitors are left at room temperature and humidity for 2 hours after the test. Then, apply the rated voltage for 30min with a series protection resistance of 1000 Ω ± 10 Ω. Measure electrical characteristics after discharging the capacitor.)						
Resistance to soldering heat	After reflow soldering and then being stabilized at +20 °C, capacitors shall meet the following limits.						
	Capacitance change	Within ±10 % of the initial value					
	Dissipation factor (tan δ)	Within the initial limit					
	Leakage current	Within the initial limit					

Frequency correction factor for ripple current

Cap. (µF) \ Freq. (Hz)	120	1 k	10 k	100 k to
4.7 to 470	0.65	0.85	0.95	1.00
680 to 1500	0.70	0.90	0.95	1.00

Marking

Example : 6.3 V 22 µF
Marking color : BLACK

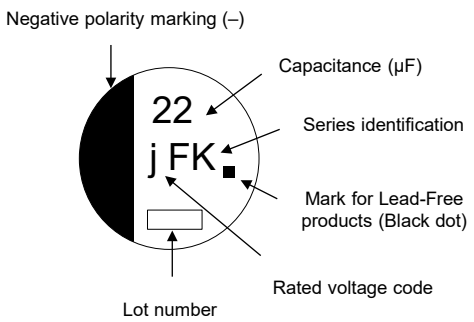

R. voltage code

j	6.3
A	10
C	16

Unit : V

E	25
V	35

Dimensions

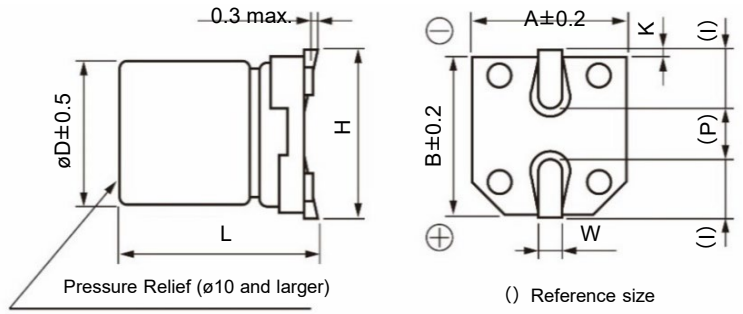

Unit : mm

Size code	øD	L	A, B	H	I	W	P	K
B	4.0	5.8±0.3	4.3	5.5 max.	1.8	0.65±0.1	1.0	$0.35^{+0.15}_{-0.20}$
C	5.0	5.8±0.3	5.3	6.5 max.	2.2	0.65±0.1	1.5	$0.35^{+0.15}_{-0.20}$
D	6.3	5.8±0.3	6.6	7.8 max.	2.6	0.65±0.1	1.8	$0.35^{+0.15}_{-0.20}$
D8	6.3	7.7±0.3	6.6	7.8 max.	2.6	0.65±0.1	1.8	$0.35^{+0.15}_{-0.20}$
E	8.0	6.2±0.3	8.3	9.5 max.	3.4	0.65±0.1	2.2	$0.35^{+0.15}_{-0.20}$
F	8.0	10.2±0.3	8.3	10.0 max.	3.4	0.90±0.2	3.1	0.70±0.2
G	10.0	10.2±0.3	10.3	12.0 max.	3.5	0.90±0.2	4.6	0.70±0.2

・The dimensions of the vibration-proof products, please refer to the page of the mounting specification.

Design and specifications are each subject to change without notice. Ask factory for the current technical specifications before purchase and/or use.
Should a safety concern arise regarding this product, please be sure to contact us immediately.

Explanation of part numbers

◇ Part number system

e.g.: EEEFK0J220AR

EEE	FK	0J	220	A	R
Product classification	Series / Code	Rated voltage (V) / Code*	Capacitance (μF) / Code	Special code / Code	Tape width (mm) / Code

Series	Code
FK	FK

Rated voltage (V)	Code*
6.3	0J(J)
10	1A(A)
16	1C(C)
25	1E(E)
35	1V(V)

Capacitance (μF)	Code	Capacitance (μF)	Code
4.7	4R7	150	151
10	100	220	221
22	220	330	331
33	330	470	471
47	470	680	681
68	680	1000	102
100	101	1500	152

Special code	Code
High-temperature lead-free reflow	A
Minia-turized product	U
D8 size	X

Tape width (mm)	Code
12	R
16, 24	P

Replace for the following configuration

Configuration	Code
Vibration proof	V

*: The text "0" or "1" is omitted when the part number exceeds 12 figures.
0J →J, 1A→A, 1C→C, 1E→E, 1V→V, 1H→H

Characteristics list

Endurance : 105 °C 2000 h

Rated voltage (V)	Capacitance (±20 %) (μF)	Case size (mm) øD	L Standard	L Vibration-proof	Size code*1	Ripple current*2 (mA rms)	Impe-dance*3 (Ω)	tan δ*4	Part No. Standard Product	Part No. Vibration-proof product	Reflow	Min. Packaging Q'ty (pcs) Taping
6.3	22	4.0	5.8	–	B	90	1.35	0.26	EEEFK0J220AR	–	(5)	2000
	47	4.0	5.8	–	(B)	90	1.35	0.26	EEEFKJ470UAR	–	(5)	2000
		5.0	5.8	–	C	160	0.70	0.26	EEEFK0J470AR	–	(5)	1000
	100	5.0	5.8	–	(C)	160	0.70	0.26	EEEFKJ101UAR	–	(5)	1000
		6.3	5.8	6.1	D	240	0.36	0.26	EEEFK0J101AP	EEEFK0J101AV	(5)	1000
	220	6.3	5.8	6.1	D	240	0.36	0.26	EEEFK0J221AP	EEEFK0J221AV	(5)	1000
	330	6.3	7.7	8.0	D8	280	0.34	0.26	EEEFKJ331XAP	EEEFKJ331XAV	(5)	900
		8.0	6.2	6.5	E	300	0.26	0.26	EEEFK0J331AP	EEEFK0J331AV	(6)	1000
	470	8.0	10.2	10.5	F	600	0.16	0.26	EEEFK0J471AP	EEEFK0J471AV	(6)	500
	1000	8.0	10.2	10.5	F	600	0.16	0.26	EEEFK0J102AP	EEEFK0J102AV	(6)	500
	1500	10.0	10.2	10.5	G	850	0.08	0.26	EEEFK0J152AP	EEEFK0J152AV	(6)	500
10	22	4.0	5.8	–	B	90	1.35	0.19	EEEFK1A220AR	–	(5)	2000
	33	4.0	5.8	–	(B)	90	1.35	0.19	EEEFKA330UAR	–	(5)	2000
		5.0	5.8	–	C	160	0.70	0.19	EEEFK1A330AR	–	(5)	1000
	150	6.3	5.8	6.1	D	240	0.36	0.19	EEEFK1A151AP	EEEFK1A151AV	(5)	1000
	220	6.3	7.7	8.0	D8	280	0.34	0.19	EEEFKA221XAP	EEEFKA221XAV	(5)	900
		8.0	6.2	6.5	E	300	0.26	0.19	EEEFK1A221AP	EEEFK1A221AV	(6)	1000
	330	8.0	10.2	10.5	F	600	0.16	0.19	EEEFK1A331AP	EEEFK1A331AV	(6)	500
	470	8.0	10.2	10.5	F	600	0.16	0.19	EEEFK1A471AP	EEEFK1A471AV	(6)	500
	680	8.0	10.2	10.5	F	600	0.16	0.19	EEEFK1A681AP	EEEFK1A681AV	(6)	500
	1000	10.0	10.2	10.5	G	850	0.08	0.19	EEEFK1A102AP	EEEFK1A102AV	(6)	500

*1: Size code( ): Miniaturization product
*2: Ripple current (100 kHz / +105 °C)
*3: Impedance (100 kHz / +20 °C)
*4: tan δ (120 Hz / +20 °C)
・Please refer to the page of "Reflow Profile" and "The Taping Dimensions".

Design and specifications are each subject to change without notice. Ask factory for the current technical specifications before purchase and/or use.
Should a safety concern arise regarding this product, please be sure to contact us immediately.

Characteristics list

Endurance : 105 °C 2000 h

Rated voltage (V)	Capacitance (±20 %) (μF)	Case size (mm) øD	Case size (mm) L Standard	Case size (mm) L Vibration-proof	Size code*1	Specification Ripple current*2 (mA rms)	Specification Impe-dance*3 (Ω)	Specification tan δ*4	Part No. Standard Product	Part No. Vibration-proof product	Reflow	Min. Packaging Q'ty (pcs) Taping
16	10	4.0	5.8	–	B	90	1.35	0.16	EEEFK1C100AR	–	(5)	2000
	22	4.0	5.8	–	(B)	90	1.35	0.16	EEEFKC220UAR	–	(5)	2000
		5.0	5.8	–	C	160	0.70	0.16	EEEFK1C220AR	–	(5)	1000
	47	5.0	5.8	–	(C)	160	0.70	0.16	EEEFKC470UAR	–	(5)	1000
		6.3	5.8	6.1	D	240	0.36	0.16	EEEFK1C470AP	EEEFK1C470AV	(5)	1000
	68	6.3	5.8	6.1	D	240	0.36	0.16	EEEFK1C680AP	EEEFK1C680AV	(5)	1000
	100	6.3	5.8	6.1	D	240	0.36	0.16	EEEFK1C101AP	EEEFK1C101AV	(5)	1000
	150	6.3	7.7	8.0	D8	280	0.34	0.16	EEEFKC151XAP	EEEFKC151XAV	(5)	900
	220	6.3	7.7	8.0	D8	280	0.34	0.16	EEEFKC221XAP	EEEFKC221XAV	(5)	900
		8.0	6.2	6.5	E	300	0.26	0.16	EEEFK1C221AP	EEEFK1C221AV	(6)	1000
	330	8.0	10.2	10.5	F	600	0.16	0.16	EEEFK1C331AP	EEEFK1C331AV	(6)	500
	470	8.0	10.2	10.5	F	600	0.16	0.16	EEEFK1C471AP	EEEFK1C471AV	(6)	500
	680	10.0	10.2	10.5	G	850	0.08	0.16	EEEFK1C681AP	EEEFK1C681AV	(6)	500
25	10	4.0	5.8	–	B	90	1.35	0.14	EEEFK1E100AR	–	(5)	2000
	22	5.0	5.8	–	C	160	0.70	0.14	EEEFK1E220AR	–	(5)	1000
	33	5.0	5.8	–	(C)	160	0.70	0.14	EEEFKE330UAR	–	(5)	1000
		6.3	5.8	6.1	D	240	0.36	0.14	EEEFK1E330AP	EEEFK1E330AV	(5)	1000
	47	6.3	5.8	6.1	D	240	0.36	0.14	EEEFK1E470AP	EEEFK1E470AV	(5)	1000
	68	6.3	5.8	6.1	D	240	0.36	0.14	EEEFK1E680AP	EEEFK1E680AV	(5)	1000
	100	6.3	7.7	8.0	D8	280	0.34	0.14	EEEFKE101XAP	EEEFKE101XAV	(5)	900
		8.0	6.2	6.5	E	300	0.26	0.14	EEEFK1E101AP	EEEFK1E101AV	(6)	1000
	150	8.0	10.2	10.5	F	600	0.16	0.14	EEEFK1E151AP	EEEFK1E151AV	(6)	500
	220	8.0	10.2	10.5	F	600	0.16	0.14	EEEFK1E221AP	EEEFK1E221AV	(6)	500
	330	8.0	10.2	10.5	F	600	0.16	0.14	EEEFK1E331AP	EEEFK1E331AV	(6)	500
	470	10.0	10.2	10.5	G	850	0.08	0.14	EEEFK1E471AP	EEEFK1E471AV	(6)	500
35	4.7	4.0	5.8	–	B	90	1.35	0.12	EEEFK1V4R7AR	–	(5)	2000
	10	4.0	5.8	–	(B)	90	1.35	0.12	EEEFKV100UAR	–	(5)	2000
		5.0	5.8	–	C	160	0.70	0.12	EEEFK1V100AR	–	(5)	1000
	22	5.0	5.8	–	C	160	0.70	0.12	EEEFK1V220AR	–	(5)	1000
	33	6.3	5.8	6.1	D	240	0.36	0.12	EEEFK1V330AP	EEEFK1V330AV	(5)	1000
	47	6.3	5.8	6.1	D	240	0.36	0.12	EEEFK1V470AP	EEEFK1V470AV	(5)	1000
	68	6.3	7.7	8.0	D8	280	0.34	0.12	EEEFKV680XAP	EEEFKV680XAV	(5)	900
	100	6.3	7.7	8.0	D8	280	0.34	0.12	EEEFKV101XAP	EEEFKV101XAV	(5)	900
		8.0	10.2	10.5	F	600	0.16	0.12	EEEFK1V101AP	EEEFK1V101AV	(6)	500
	150	8.0	10.2	10.5	F	600	0.16	0.12	EEEFK1V151AP	EEEFK1V151AV	(6)	500
	220	8.0	10.2	10.5	F	600	0.16	0.12	EEEFK1V221AP	EEEFK1V221AV	(6)	500
	330	10.0	10.2	10.5	G	850	0.08	0.12	EEEFK1V331AP	EEEFK1V331AV	(6)	500

*1: Size code( ): Miniaturization product
*2: Ripple current (100 kHz / +105 °C)
*3: Impedance (100 kHz / +20 °C)
*4: tan δ (120 Hz / +20 °C)
・Please refer to the page of "Reflow Profile" and "The Taping Dimensions".

Panasonic
INDUSTRY

Aluminum Electrolytic Capacitors

Surface Mount Type

FK series (Medium-size)

High temperature Lead-Free reflow (suffix : A∗)

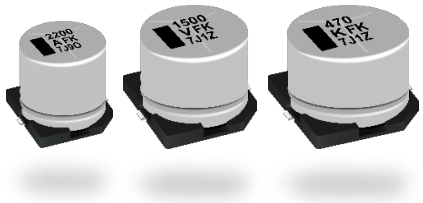

Features

- Endurance : 105 °C 5000 h
- Vibration-proof product (30G guaranteed) is available upon request
- AEC-Q200 compliant
- RoHS compliant

Specifications

Category temp. range	–55 °C to +105 °C											
Rated voltage range	6.3 V to 100 V											
Capacitance range	47 µF to 6800 µF											
Capacitance tolerance	±20 % (120 Hz / +20 °C)											
Leakage current	I ≤ 0.01 CV（µA） After 2 minutes											
Dissipation factor (tan δ)	Please see the attached characteristics list											
Characteristics at low temperature	Rated voltage (V)	6.3	10	16	25	35	50	63	80	100	(Impedance ratio at 120 Hz)	
	Z (–25 °C) / Z (+20 °C)	2	2	2	2	2	2	2	2	2		
	Z (–40 °C) / Z (+20 °C)	3	3	3	3	3	3	3	3	3		
	Z (–55 °C) / Z (+20 °C)	4	4	4	3	3	3	3	3	3		
Endurance	After applying rated working voltage for 5000 hours at +105 °C ± 2 °C and then being stabilized at +20 °C, capacitors shall meet the following limits.											
	Capacitance change	Within ±30 % of the initial value										
	Dissipation factor (tan δ)	≤ 200 % of the initial limit										
	Leakage current	Within the initial limit										
Shelf life	After storage for 1000 hours at +105 °C ± 2 °C with no voltage applied and then being stabilized at +20 °C, capacitors shall meet the limits specified in endurance. (Capacitors are left at room temperature and humidity for 2 hours after the test. Then, apply the rated voltage for 30min with a series protection resistance of 1000 Ω ± 10 Ω. Measure electrical characteristics after discharging the capacitor.)											
Resistance to soldering heat	After reflow soldering and then being stabilized at +20 °C, capacitors shall meet the following limits.											
	Capacitance change	Within ±10 % of the initial value										
	Dissipation factor (tan δ)	Within the initial limit										
	Leakage current	Within the initial limit										

Frequency correction factor for ripple current

Frequency (Hz)	120	1 k	10 k	100 k to
Correction factor	0.75	0.90	0.95	1.00

Marking

Example : 6.3 V 3300 µF
Marking color : BLACK

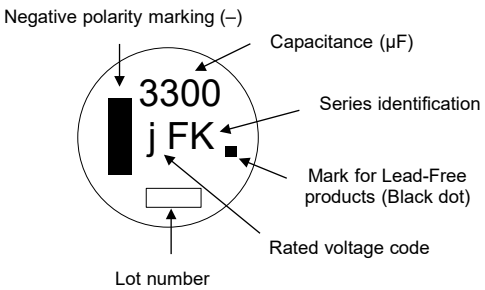

R. voltage code

j	6.3
A	10
C	16
E	25
V	35

Unit : V

H	50
J	63
K	80
2A	100

Dimensions

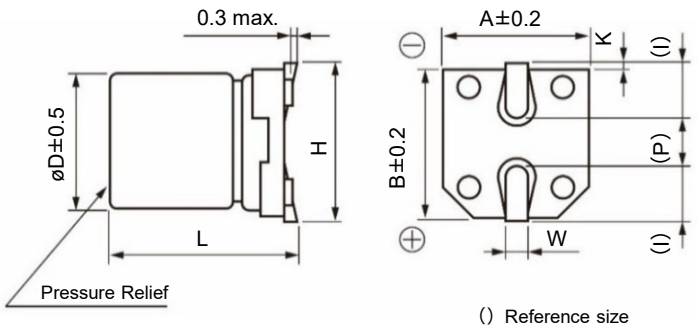

Unit : mm

Size code	øD	L	A, B	H	I	W	P	K
H13	12.5	13.5±0.5	13.5	15.0 max.	4.7	0.90±0.3	4.4	0.70±0.3
J16	16.0	16.5±0.5	17.0	19.0 max.	5.5	1.20±0.3	6.7	0.70±0.3
K16	18.0	16.5±0.5	19.0	21.0 max.	6.7	1.20±0.3	6.7	0.70±0.3

・The dimensions of the vibration-proof products, please refer to the page of the mounting specification.

Design and specifications are each subject to change without notice. Ask factory for the current technical specifications before purchase and/or use.
Should a safety concern arise regarding this product, please be sure to contact us immediately.

Explanation of part numbers

◇ Part number system

e.g.: EEEFK0J332AQ

EEE	FK	0J	332	A	Q
Product classification	Series / Code	Rated voltage (V) / Code	Capacitance (μF) / Code	Special code / Code	Tape width (mm) / Code

FK

Series	Code
FK	FK

0J

Rated voltage (V)	Code
6.3	0J
10	1A
16	1C
25	1E
35	1V
50	1H
63	1J
80	1K
100	2A

332

Capacitance (μF)	Code	Capacitance (μF)	Code
47	470	560	561
68	680	680	681
100	101	1000	102
150	151	1500	152
220	221	2200	222
330	331	3300	332
390	391	4700	472
470	471	6800	682

A

Special code	Code
High-temperature lead-free reflow	A

Q

Tape width (mm)	Code
32	Q
44	M

Replace for the following configuration

Configuration	Code
Vibration proof	V

Characteristics list

Endurance : 105 °C 5000 h

Rated voltage (V)	Capacitance (±20 %) (μF)	Case size (mm) øD	Case size (mm) L Standard	Case size (mm) L Vibration-proof	Size code	Specification Ripple current*1 (mA rms)	Specification Impe-dance*2 (Ω)	Specification tan δ*3	Part No. Standard Product	Part No. Vibration-proof product	Reflow	Min. Packaging Q'ty (pcs) Taping
6.3	3300	12.5	13.5	13.8	H13	1100	0.06	0.30	EEEFK0J332AQ	EEEFK0J332AV	(9)	200
	6800	16.0	16.5	16.8	J16	1800	0.035	0.36	EEEFK0J682AM	EEEFK0J682AV	(9)	125
10	2200	12.5	13.5	13.8	H13	1100	0.06	0.21	EEEFK1A222AQ	EEEFK1A222AV	(9)	200
	4700	16.0	16.5	16.8	J16	1800	0.035	0.25	EEEFK1A472AM	EEEFK1A472AV	(9)	125
	6800	18.0	16.5	16.8	K16	2060	0.033	0.29	EEEFK1A682AM	EEEFK1A682AV	(9)	125
16	1500	12.5	13.5	13.8	H13	1100	0.06	0.16	EEEFK1C152AQ	EEEFK1C152AV	(9)	200
	3300	16.0	16.5	16.8	J16	1800	0.035	0.20	EEEFK1C332AM	EEEFK1C332AV	(9)	125
	4700	18.0	16.5	16.8	K16	2060	0.033	0.22	EEEFK1C472AM	EEEFK1C472AV	(9)	125
25	1000	12.5	13.5	13.8	H13	1100	0.06	0.14	EEEFK1E102AQ	EEEFK1E102AV	(9)	200
	1500	16.0	16.5	16.8	J16	1800	0.035	0.16	EEEFK1E152AM	EEEFK1E152AV	(9)	125
	2200	16.0	16.5	16.8	J16	1800	0.035	0.16	EEEFK1E222AM	EEEFK1E222AV	(9)	125
	3300	18.0	16.5	16.8	K16	2060	0.033	0.18	EEEFK1E332AM	EEEFK1E332AV	(9)	125
35	470	12.5	13.5	13.8	H13	1100	0.06	0.12	EEEFK1V471AQ	EEEFK1V471AV	(9)	200
	680	12.5	13.5	13.8	H13	1100	0.06	0.12	EEEFK1V681AQ	EEEFK1V681AV	(9)	200
	1000	16.0	16.5	16.8	J16	1800	0.035	0.12	EEEFK1V102AM	EEEFK1V102AV	(9)	125
	1500	16.0	16.5	16.8	J16	1800	0.035	0.12	EEEFK1V152AM	EEEFK1V152AV	(9)	125
50	330	12.5	13.5	13.8	H13	900	0.12	0.12	EEEFK1H331AQ	EEEFK1H331AV	(10)	200
	390	12.5	13.5	13.8	H13	900	0.12	0.12	EEEFK1H391AQ	EEEFK1H391AV	(10)	200
	470	16.0	16.5	16.8	J16	1610	0.073	0.12	EEEFK1H471AM	EEEFK1H471AV	(10)	125
	560	16.0	16.5	16.8	J16	1610	0.073	0.12	EEEFK1H561AM	EEEFK1H561AV	(10)	125
	680	16.0	16.5	16.8	J16	1610	0.073	0.12	EEEFK1H681AM	EEEFK1H681AV	(10)	125
	1000	16.0	16.5	16.8	J16	1610	0.073	0.12	EEEFK1H102AM	EEEFK1H102AV	(10)	125
63	150	12.5	13.5	13.8	H13	800	0.16	0.10	EEEFK1J151AQ	EEEFK1J151AV	(10)	200
	220	12.5	13.5	13.8	H13	800	0.16	0.10	EEEFK1J221AQ	EEEFK1J221AV	(10)	200
	470	16.0	16.5	16.8	J16	1410	0.082	0.10	EEEFK1J471AM	EEEFK1J471AV	(10)	125
	680	18.0	16.5	16.8	K16	1690	0.08	0.10	EEEFK1J681AM	EEEFK1J681AV	(10)	125
80	68	12.5	13.5	13.8	H13	500	0.32	0.08	EEEFK1K680AQ	EEEFK1K680AV	(11)	200
	100	12.5	13.5	13.8	H13	500	0.32	0.08	EEEFK1K101AQ	EEEFK1K101AV	(11)	200
	150	12.5	13.5	13.8	H13	500	0.32	0.08	EEEFK1K151AQ	EEEFK1K151AV	(11)	200
	330	16.0	16.5	16.8	J16	793	0.17	0.08	EEEFK1K331AM	EEEFK1K331AV	(11)	125
	470	18.0	16.5	16.8	K16	917	0.153	0.08	EEEFK1K471AM	EEEFK1K471AV	(11)	125
100	47	12.5	13.5	13.8	H13	500	0.32	0.07	EEEFK2A470AQ	EEEFK2A470AV	(11)	200
	68	12.5	13.5	13.8	H13	500	0.32	0.07	EEEFK2A680AQ	EEEFK2A680AV	(11)	200
	100	16.0	16.5	16.8	J16	793	0.17	0.07	EEEFK2A101AM	EEEFK2A101AV	(11)	125
	150	16.0	16.5	16.8	J16	793	0.17	0.07	EEEFK2A151AM	EEEFK2A151AV	(11)	125
	220	18.0	16.5	16.8	K16	917	0.153	0.07	EEEFK2A221AM	EEEFK2A221AV	(11)	125
	330	18.0	16.5	16.8	K16	917	0.153	0.07	EEEFK2A331AM	EEEFK2A331AV	(11)	125

*1: Ripple current (100 kHz / +105 °C) *2: Impedance (100 kHz / +20 °C) *3: tan δ (120 Hz / +20 °C)

・Please refer to the page of "Reflow Profile" and "The Taping Dimensions".

Design and specifications are each subject to change without notice. Ask factory for the current technical specifications before purchase and/or use.
Should a safety concern arise regarding this product, please be sure to contact us immediately.

Panasonic
INDUSTRY

Aluminum Electrolytic Capacitors

Surface Mount Type

Halogen-free FK series

High temperature Lead-Free reflow (suffix : A✻)

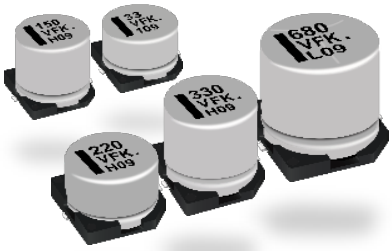

Features

- Endurance : 105 °C 2000 h
- Low impedance (40 % to 60 % less than FC series)
- Miniaturized (30 % to 50 % less than FC series)
- AEC-Q200 compliant
- RoHS compliant

Country of origin

- Malaysia

Specifications

Category temp. range	–55 °C to +105 °C						
Rated voltage range	6.3 V to 35 V						
Capacitance range	33 µF to 1500 µF						
Capacitance tolerance	±20 % (120 Hz / +20 °C)						
Leakage current	I ≤ 0.01 CV or 3 (µA), whichever is greater, 2 minutes after reaching rated voltage, 20 °C *CV = (Capacitance in µF) x (Rated voltage in V)						
Dissipation factor (tan δ)	Please see the attached characteristics list						
Characteristics at low temperature	Rated voltage (V)	6.3	10	16	25	35	(Impedance ratio at 120 Hz)
	Z (–25 °C) / Z (+20 °C)	2	2	2	2	2	
	Z (–40 °C) / Z (+20 °C)	3	3	3	3	3	
	Z (–55 °C) / Z (+20 °C)	4	4	4	3	3	
Endurance	After applying rated working voltage for 2000 hours at +105 °C ± 2 °C and then being stabilized at +20 °C, capacitors shall meet the following limits.						
	Capacitance change	Within ±30 % of the initial value					
	Dissipation factor (tan δ)	≤ 200 % of the initial limit					
	Leakage current	Within the initial limit					
Shelf life	After storage for 1000 hours at +105 °C ± 2 °C with no voltage applied and then being stabilized at +20 °C, capacitors shall meet the limits specified in endurance. (Capacitors are left at room temperature and humidity for 2 hours after the test. Then, apply the rated voltage for 30min with a series protection resistance of 1000 Ω ± 10 Ω. Measure electrical characteristics after discharging the capacitor.)						
Resistance to soldering heat	After reflow soldering and then being stabilized at +20 °C, capacitors shall meet the following limits.						
	Capacitance change	Within ±10 % of the initial value					
	Dissipation factor (tan δ)	Within the initial limit					
	Leakage current	Within the initial limit					

Frequency correction factor for ripple current

Cap. (µF) \ Freq. (Hz)	120	1 k	10 k	100 k to
33 to 470	0.65	0.85	0.95	1.00
680 to 1500	0.70	0.90	0.95	1.00

Marking

Example : 6.3 V 100 µF
Marking color : BLACK

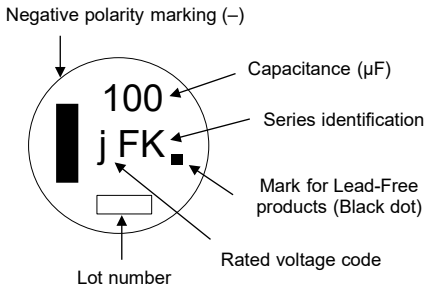

R. voltage code

j	6.3
A	10
C	16
E	25
V	35

Unit : V

Dimensions

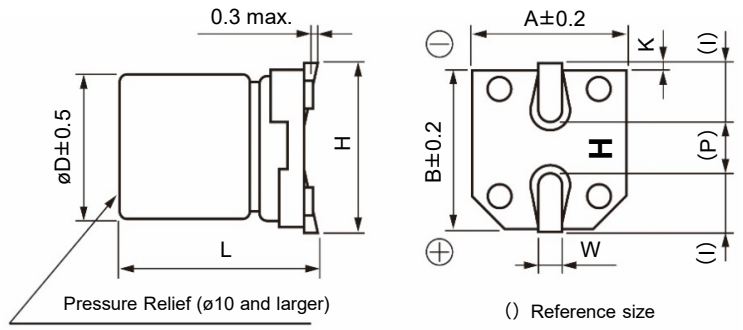

Unit : mm

Size code	øD	L	A, B	H	I	W	P	K
D	6.3	5.8±0.3	6.6	7.8 max.	2.6	0.65±0.1	1.8	$0.35^{+0.15}_{-0.20}$
D8	6.3	7.7±0.3	6.6	7.8 max.	2.6	0.65±0.1	1.8	$0.35^{+0.15}_{-0.20}$
E	8.0	6.2±0.3	8.3	9.5 max.	3.4	0.65±0.1	2.2	$0.35^{+0.15}_{-0.20}$
F	8.0	10.2±0.3	8.3	10.0 max.	3.4	0.90±0.2	3.1	0.70±0.2
G	10.0	10.2±0.3	10.3	12.0 max.	3.5	0.90±0.2	4.6	0.70±0.2

Design and specifications are each subject to change without notice. Ask factory for the current technical specifications before purchase and/or use.
Should a safety concern arise regarding this product, please be sure to contact us immediately.

Explanation of part numbers

◇ Part number system

e.g.: EEEFK0J101AL

EEE	FK	0J	101	A	L
Product classification	Series / Code	Rated voltage (V) / Code*	Capacitance (μF) / Code / Capacitance (μF) / Code	Special code / Code	Configuration / Code

Series	Code
FK	FK

Rated voltage (V)	Code*
6.3	0J(J)
10	1A(A)
16	1C(C)
25	1E(E)
35	1V(V)

Capacitance (μF)	Code	Capacitance (μF)	Code
33	330	330	331
47	470	470	471
68	680	680	681
100	101	1000	102
150	151	1500	152
220	221		

Special code	Code
High-temperature lead-free reflow	A
D8 size	X

(Two codes can be combined)

Configuration	Code
Halogen -free	L

*: The text "0" or "1" is omitted when the part number exceeds 12 figures.
0J →J, 1A→A, 1C→C, 1E→E, 1V→V

Characteristics list

Endurance : 105 °C 2000 h

Rated voltage (V)	Capacitance (±20 %) (μF)	Case size (mm) øD	Case size (mm) L	Size code	Specification: Ripple current*1 (mA rms)	Specification: Impedance*2 (Ω)	Specification: tanδ*3	Part number	Reflow	Min. Packaging Q'ty (pcs) Taping
6.3	100	6.3	5.8	D	240	0.36	0.26	EEEFK0J101AL	(5)	1000
	220	6.3	5.8	D	240	0.36	0.26	EEEFK0J221AL	(5)	1000
	330	6.3	7.7	D8	280	0.34	0.26	EEEFKJ331XAL	(5)	900
		8.0	6.2	E	300	0.26	0.26	EEEFK0J331AL	(6)	1000
	470	8.0	10.2	F	600	0.16	0.26	EEEFK0J471AL	(6)	500
	1000	8.0	10.2	F	600	0.16	0.26	EEEFK0J102AL	(6)	500
	1500	10.0	10.2	G	850	0.08	0.26	EEEFK0J152AL	(6)	500
10	150	6.3	5.8	D	240	0.36	0.19	EEEFK1A151AL	(5)	1000
	220	6.3	7.7	D8	280	0.34	0.19	EEEFKA221XAL	(5)	900
		8.0	6.2	E	300	0.26	0.19	EEEFK1A221AL	(6)	1000
	330	8.0	10.2	F	600	0.16	0.19	EEEFK1A331AL	(6)	500
	470	8.0	10.2	F	600	0.16	0.19	EEEFK1A471AL	(6)	500
	680	8.0	10.2	F	600	0.16	0.19	EEEFK1A681AL	(6)	500
	1000	10.0	10.2	G	850	0.08	0.19	EEEFK1A102AL	(6)	500
16	47	6.3	5.8	D	240	0.36	0.16	EEEFK1C470AL	(5)	1000
	68	6.3	5.8	D	240	0.36	0.16	EEEFK1C680AL	(5)	1000
	100	6.3	5.8	D	240	0.36	0.16	EEEFK1C101AL	(5)	1000
	150	6.3	7.7	D8	280	0.34	0.16	EEEFKC151XAL	(5)	900
	220	6.3	7.7	D8	280	0.34	0.16	EEEFKC221XAL	(5)	900
		8.0	6.2	E	300	0.26	0.16	EEEFK1C221AL	(6)	1000
	330	8.0	10.2	F	600	0.16	0.16	EEEFK1C331AL	(6)	500
	470	8.0	10.2	F	600	0.16	0.16	EEEFK1C471AL	(6)	500
	680	10.0	10.2	G	850	0.08	0.16	EEEFK1C681AL	(6)	500
25	33	6.3	5.8	D	240	0.36	0.14	EEEFK1E330AL	(5)	1000
	47	6.3	5.8	D	240	0.36	0.14	EEEFK1E470AL	(5)	1000
	68	6.3	5.8	D	240	0.36	0.14	EEEFK1E680AL	(5)	1000
	100	6.3	7.7	D8	280	0.34	0.14	EEEFKE101XAL	(5)	900
		8.0	6.2	E	300	0.26	0.14	EEEFK1E101AL	(6)	1000
	150	8.0	10.2	F	600	0.16	0.14	EEEFK1E151AL	(6)	500
	220	8.0	10.2	F	600	0.16	0.14	EEEFK1E221AL	(6)	500
	330	8.0	10.2	F	600	0.16	0.14	EEEFK1E331AL	(6)	500
	470	10.0	10.2	G	850	0.08	0.14	EEEFK1E471AL	(6)	500
35	33	6.3	5.8	D	240	0.36	0.12	EEEFK1V330AL	(5)	1000
	47	6.3	5.8	D	240	0.36	0.12	EEEFK1V470AL	(5)	1000
	68	6.3	7.7	D8	280	0.34	0.12	EEEFKV680XAL	(5)	900
	100	6.3	7.7	D8	280	0.34	0.12	EEEFKV101XAL	(5)	900
		8.0	10.2	F	600	0.16	0.12	EEEFK1V101AL	(6)	500
	150	8.0	10.2	F	600	0.16	0.12	EEEFK1V151AL	(6)	500
	220	8.0	10.2	F	600	0.16	0.12	EEEFK1V221AL	(6)	500
	330	10.0	10.2	G	850	0.08	0.12	EEEFK1V331AL	(6)	500

*1: Ripple current (100 kHz / +105 °C)
*2: Impedance (100 kHz / +20 °C)
*3: tan δ (120 Hz / +20 °C)
・Please refer to the page of "Reflow Profile" and "The Taping Dimensions".

Design and specifications are each subject to change without notice. Ask factory for the current technical specifications before purchase and/or use.
Should a safety concern arise regarding this product, please be sure to contact us immediately.

Panasonic
INDUSTRY

Aluminum Electrolytic Capacitors

Surface Mount Type

FK series

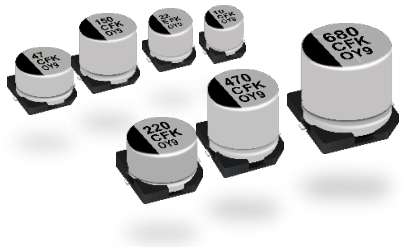

Features

- Endurance : 105 °C 2000 h to 5000 h
- Low impedance（40 % to 60 % less than FC series）
- Miniaturized (30 % to 50 % less than FC series)
- Vibration-proof product (30G guaranteed) is available upon request（ø6.3 ≤）
- AEC-Q200 compliant
- RoHS compliant

Specifications

Category temp. range	–55 °C to +105 °C											
Rated voltage range	6.3 V to 100 V											
Capacitance range	3.3 µF to 6800 µF											
Capacitance tolerance	±20 % (120 Hz / +20 °C)											
Leakage current	I ≤ 0.01 CV or 3 (µA), whichever is greater, 2 minutes after reaching rated voltage, 20 °C *CV = (Capacitance in µF) x (Rated voltage in V)											
Dissipation factor (tan δ)	Please see the attached characteristics list											
Characteristics at low temperature	Rated voltage (V)	6.3	10	16	25	35	50	63	80	100	(Impedance ratio at 120 Hz)	
	Z (–25 °C) / Z (+20 °C)	2	2	2	2	2	2	2	2	2		
	Z (–40 °C) / Z (+20 °C)	3	3	3	3	3	3	3	3	3		
	Z (–55 °C) / Z (+20 °C)	4	4	4	3	3	3	3	3	3		
Endurance	After applying rated working voltage for 2000 hours at +105 °C ± 2 °C and then being stabilized at +20 °C, capacitors shall meet the following limits.（≥ ø12.5 and suffix “G” in ø8×10.2, ø10×10.2 are 5000 hours）											
	Capacitance change	Within ±30 % of the initial value (Suffix “G” is ≤ ±35 %)										
	Dissipation factor（tan δ）	≤ 200 % of the initial limit (Suffix “G” is ≤ 300 %)										
	Leakage current	Within the initial limit										
Shelf life	After storage for 1000 hours at +105 °C ± 2 °C with no voltage applied and then being stabilized at +20 °C, capacitors shall meet the following limits. (Capacitors are left at room temperature and humidity for 2 hours after the test. Then, apply the rated voltage for 30min with a series protection resistance of 1000 Ω ± 10 Ω. Measure electrical characteristics after discharging the capacitor.)											
	Capacitance change	Within ±30 % of the initial value										
	Dissipation factor（tan δ）	≤ 200 % of the initial limit										
	Leakage current	Within the initial limit										
Resistance to soldering heat	After reflow soldering and then being stabilized at +20 °C, capacitors shall meet the following limits.											
	Capacitance change	Within ±10 % of the initial value										
	Dissipation factor（tan δ）	Within the initial limit										
	Leakage current	Within the initial limit										

Frequency correction factor for ripple current

Frequency (Hz)	50, 60	120	1 k	10 k	100 k to
Correction factor	0.70	0.75	0.90	0.95	1.00

Marking

Example : 6.3 V 22 µF, 6.3 V 3300 µF
Marking color : BLACK

≤ ø10

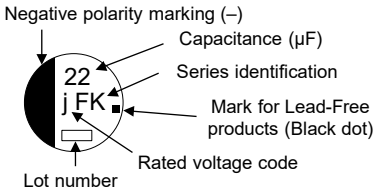

≥ ø12.5

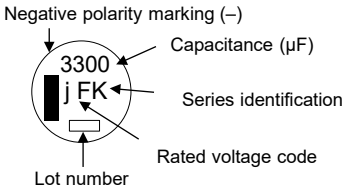

R. voltage code

Unit : V

j	6.3
A	10
C	16
E	25
V	35
H	50
J	63
K	80
2A	100

Dimensions

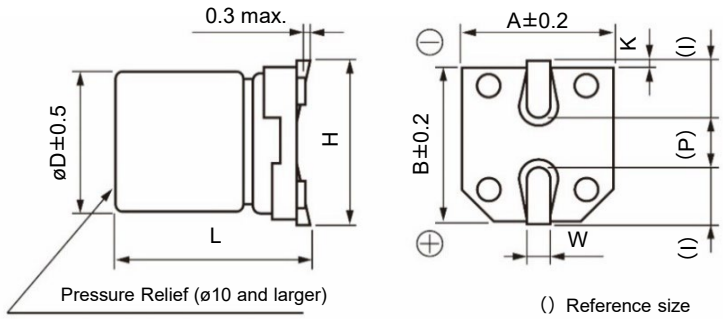

Unit : mm

Size code	øD	L	A, B	H	I	W	P	K
B	4.0	5.8±0.3	4.3	5.5 max.	1.8	0.65±0.1	1.0	$0.35^{+0.15}_{-0.20}$
C	5.0	5.8±0.3	5.3	6.5 max.	2.2	0.65±0.1	1.5	$0.35^{+0.15}_{-0.20}$
D	6.3	5.8±0.3	6.6	7.8 max.	2.6	0.65±0.1	1.8	$0.35^{+0.15}_{-0.20}$
D8	6.3	7.7±0.3	6.6	7.8 max.	2.6	0.65±0.1	1.8	$0.35^{+0.15}_{-0.20}$
E	8.0	6.2±0.3	8.3	9.5 max.	3.4	0.65±0.1	2.2	$0.35^{+0.15}_{-0.20}$
F	8.0	10.2±0.3	8.3	10.0 max.	3.4	0.90±0.2	3.1	0.70±0.2
G	10.0	10.2±0.3	10.3	12.0 max.	3.5	0.90±0.2	4.6	0.70±0.2
H13	12.5	13.5±0.5	13.5	15.0 max.	4.7	0.90±0.3	4.4	0.70±0.3
J16	16.0	16.5±0.5	17.0	19.0 max.	5.5	1.20±0.3	6.7	0.70±0.3
K16	18.0	16.5±0.5	19.0	21.0 max.	6.7	1.20±0.3	6.7	0.70±0.3

・The dimensions of the vibration-proof products, please refer to the page of the mounting specification.

Design and specifications are each subject to change without notice. Ask factory for the current technical specifications before purchase and/or use.
Should a safety concern arise regarding this product, please be sure to contact us immediately.

Explanation of part numbers

◇ Part number system

e.g.: EEEFK0J470UR

EEE	FK	0J	470	U	R
Product classification	Series / Code	Rated voltage (V) / Code	Capacitance (μF) / Code	Special code / Code	Tape width (mm) / Code

Series	Code
FK	FK

Rated voltage (V)	Code
6.3	0J
10	1A
16	1C
25	1E
35	1V
50	1H
63	1J
100	2A

Capacitance (μF)	Code	Capacitance (μF)	Code
3.3	3R3	390	391
4.7	4R7	470	471
10	100	560	471
22	220	680	681
33	330	1000	102
47	470	1500	152
68	680	2200	152
100	101	3300	152
150	151	4700	152
220	221	6800	152
330	331		

Special code	Code
Miniaturized product	U
D8 size	X
5000 h	G
Others	–

Tape width (mm)	Code
12	R
16, 24	P
32	Q
44	M

Replace for the following configuration

Configuration	Code
Vibration proof	V

Characteristics list

Endurance : 105 °C 2000 h (ø12.5 : 5000 h)

Rated voltage (V)	Capacitance (±20 %) (μF)	Case size (mm) øD	L Standard	L Vibration-proof	Size code*1	Specification Ripple current*2 (mA rms)	Impedance*3 (Ω)	tan δ*4	Part No. Standard Product	Part No. Vibration-proof product	Reflow	Min. Packaging Q'ty (pcs) Taping
6.3	22	4.0	5.8	–	B	90	1.35	0.26	EEEFK0J220R	–	(1)	2000
	47	4.0	5.8	–	(B)	90	1.35	0.26	EEEFK0J470UR	–	(1)	2000
		5.0	5.8	–	C	160	0.70	0.26	EEEFK0J470R	–	(1)	1000
	100	5.0	5.8	–	(C)	160	0.70	0.26	EEEFK0J101UR	–	(1)	1000
		6.3	5.8	6.1	D	240	0.36	0.26	EEEFK0J101P	EEEFK0J101V	(1)	1000
	220	6.3	5.8	6.1	D	240	0.36	0.26	EEEFK0J221P	EEEFK0J221V	(1)	1000
	330	6.3	7.7	8.0	D8	280	0.34	0.26	EEEFK0J331XP	EEEFK0J331XV	(1)	900
		8.0	6.2	6.5	E	300	0.26	0.26	EEEFK0J331P	EEEFK0J331V	(2)	1000
	470	8.0	10.2	10.5	F	600	0.16	0.26	EEEFK0J471P	EEEFK0J471V	(2)	500
	1000	8.0	10.2	10.5	F	600	0.16	0.26	EEEFK0J102P	EEEFK0J102V	(2)	500
	1500	10.0	10.2	10.5	G	850	0.08	0.26	EEEFK0J152P	EEEFK0J152V	(2)	500
	3300	12.5	13.5	13.8	H13	1100	0.06	0.30	EEVFK0J332Q	EEVFK0J332V	(3)	200
	6800	16.0	16.5	16.8	J16	1800	0.035	0.36	EEVFK0J682M	EEVFK0J682V	(3)	125
10	22	4.0	5.8	–	B	90	1.35	0.19	EEEFK1A220R	–	(1)	2000
	33	4.0	5.8	–	(B)	90	1.35	0.19	EEEFK1A330UR	–	(1)	2000
		5.0	5.8	–	C	160	0.70	0.19	EEEFK1A330R	–	(1)	1000
	150	6.3	5.8	6.1	D	240	0.36	0.19	EEEFK1A151P	EEEFK1A151V	(1)	1000
	220	6.3	7.7	8.0	D8	280	0.34	0.19	EEEFK1A221XP	EEEFK1A221XV	(1)	900
		8.0	6.2	6.5	E	300	0.26	0.19	EEEFK1A221P	EEEFK1A221V	(2)	1000
	330	8.0	10.2	10.5	F	600	0.16	0.19	EEEFK1A331P	EEEFK1A331V	(2)	500
	470	8.0	10.2	10.5	F	600	0.16	0.19	EEEFK1A471P	EEEFK1A471V	(2)	500
	680	8.0	10.2	10.5	F	600	0.16	0.19	EEEFK1A681P	EEEFK1A681V	(2)	500
	1000	10.0	10.2	10.5	G	850	0.08	0.19	EEEFK1A102P	EEEFK1A102V	(2)	500
	2200	12.5	13.5	13.8	H13	1100	0.06	0.21	EEVFK1A222Q	EEVFK1A222V	(3)	200
	4700	16.0	16.5	16.8	J16	1800	0.035	0.25	EEVFK1A472M	EEVFK1A472V	(3)	125
	6800	18.0	16.5	16.8	K16	2060	0.033	0.29	EEVFK1A682M	EEVFK1A682V	(3)	125
16	10	4.0	5.8	–	B	90	1.35	0.16	EEEFK1C100R	–	(1)	2000
	22	4.0	5.8	–	(B)	90	1.35	0.16	EEEFK1C220UR	–	(1)	2000
		5.0	5.8	–	C	160	0.70	0.16	EEEFK1C220R	–	(1)	1000
	47	5.0	5.8	–	(C)	160	0.70	0.16	EEEFK1C470UR	–	(1)	1000
		6.3	5.8	6.1	D	240	0.36	0.16	EEEFK1C470P	EEEFK1C470V	(1)	1000
	68	6.3	5.8	6.1	D	240	0.36	0.16	EEEFK1C680P	EEEFK1C680V	(1)	1000
	100	6.3	5.8	6.1	D	240	0.36	0.16	EEEFK1C101P	EEEFK1C101V	(1)	1000
	150	6.3	7.7	8.0	D8	280	0.34	0.16	EEEFK1C151XP	EEEFK1C151XV	(1)	900
	220	6.3	7.7	8.0	D8	280	0.34	0.16	EEEFK1C221XP	EEEFK1C221XV	(1)	900
		8.0	6.2	6.5	E	300	0.26	0.16	EEEFK1C221P	EEEFK1C221V	(2)	1000
	330	8.0	10.2	10.5	F	600	0.16	0.16	EEEFK1C331P	EEEFK1C331V	(2)	500
	470	8.0	10.2	10.5	F	600	0.16	0.16	EEEFK1C471P	EEEFK1C471V	(2)	500
	680	10.0	10.2	10.5	G	850	0.08	0.16	EEEFK1C681P	EEEFK1C681V	(2)	500
	1500	12.5	13.5	13.8	H13	1100	0.06	0.16	EEVFK1C152Q	EEVFK1C152V	(3)	200
	3300	16.0	16.5	16.8	J16	1800	0.035	0.20	EEVFK1C332M	EEVFK1C332V	(3)	125
	4700	18.0	16.5	16.8	K16	2060	0.033	0.22	EEVFK1C472M	EEVFK1C472V	(3)	125

*1: Size code( ): Miniaturization product
*2: Ripple current (100 kHz / +105 °C)
*3: Impedance (100 kHz / +20 °C)
*4: tan δ (120 Hz / +20 °C)

・Please refer to the page of "Reflow Profile" and "The Taping Dimensions".

Design and specifications are each subject to change without notice. Ask factory for the current technical specifications before purchase and/or use.
Should a safety concern arise regarding this product, please be sure to contact us immediately.

Characteristics list

Endurance : 105 °C 2000 h (ø12.5 : 5000 h)

Rated voltage (V)	Capacitance (±20 %) (μF)	Case size (mm) øD	Case size (mm) L Standard	Case size (mm) L Vibration-proof	Size code*1	Specification Ripple current*2 (mA rms)	Specification Impe-dance*3 (Ω)	Specification tan δ*4	Part No. Standard Product	Part No. Vibration-proof product	Reflow	Min. Packaging Q'ty (pcs) Taping
25	10	4.0	5.8	–	B	90	1.35	0.14	EEEFK1E100R	–	(1)	2000
	22	5.0	5.8	–	C	160	0.70	0.14	EEEFK1E220R	–	(1)	1000
	33	5.0	5.8	–	(C)	160	0.70	0.14	EEEFK1E330UR	–	(1)	1000
		6.3	5.8	6.1	D	240	0.36	0.14	EEEFK1E330P	EEEFK1E330V	(1)	1000
	47	6.3	5.8	6.1	D	240	0.36	0.14	EEEFK1E470P	EEEFK1E470V	(1)	1000
	68	6.3	5.8	6.1	D	240	0.36	0.14	EEEFK1E680P	EEEFK1E680V	(1)	1000
	100	6.3	7.7	8.0	D8	280	0.34	0.14	EEEFK1E101XP	EEEFK1E101XV	(1)	900
		8.0	6.2	6.5	E	300	0.26	0.14	EEEFK1E101P	EEEFK1E101V	(2)	1000
	150	8.0	10.2	10.5	F	600	0.16	0.14	EEEFK1E151P	EEEFK1E151V	(2)	500
	220	8.0	10.2	10.5	F	600	0.16	0.14	EEEFK1E221P	EEEFK1E221V	(2)	500
	330	8.0	10.2	10.5	F	600	0.16	0.14	EEEFK1E331P	EEEFK1E331V	(2)	500
	470	10.0	10.2	10.5	G	850	0.08	0.14	EEEFK1E471P	EEEFK1E471V	(2)	500
	1000	12.5	13.5	13.8	H13	1100	0.06	0.14	EEVFK1E102Q	EEVFK1E102V	(3)	200
	1500	16.0	16.5	16.8	J16	1800	0.035	0.14	EEVFK1E152M	EEVFK1E152V	(3)	125
	2200	16.0	16.5	16.8	J16	1800	0.035	0.16	EEVFK1E222M	EEVFK1E222V	(3)	125
	3300	18.0	16.5	16.8	K16	2060	0.033	0.18	EEVFK1E332M	EEVFK1E332V	(3)	125
35	4.7	4.0	5.8	–	B	90	1.35	0.12	EEEFK1V4R7R	–	(1)	2000
	10	4.0	5.8	–	(B)	90	1.35	0.12	EEEFK1V100UR	–	(1)	2000
		5.0	5.8	–	C	160	0.70	0.12	EEEFK1V100R	–	(1)	1000
	22	5.0	5.8	–	C	160	0.70	0.12	EEEFK1V220R	–	(1)	1000
	33	6.3	5.8	6.1	D	240	0.36	0.12	EEEFK1V330P	EEEFK1V330V	(1)	1000
	47	6.3	5.8	6.1	D	240	0.36	0.12	EEEFK1V470P	EEEFK1V470V	(1)	1000
	68	6.3	7.7	8	D8	280	0.34	0.12	EEEFK1V680XP	EEEFK1V680XV	(1)	900
	100	6.3	7.7	8	D8	280	0.34	0.12	EEEFK1V101XP	EEEFK1V101XV	(1)	900
		8.0	10.2	10.5	F	600	0.16	0.12	EEEFK1V101P	EEEFK1V101V	(2)	500
	150	8.0	10.2	10.5	F	600	0.16	0.12	EEEFK1V151P	EEEFK1V151V	(2)	500
	220	8.0	10.2	10.5	F	600	0.16	0.12	EEEFK1V221P	EEEFK1V221V	(2)	500
	330	10.0	10.2	10.5	G	850	0.08	0.12	EEEFK1V331P	EEEFK1V331V	(2)	500
	470	12.5	13.5	13.8	H13	1100	0.06	0.12	EEVFK1V471Q	EEVFK1V471V	(3)	200
	680	12.5	13.5	13.8	H13	1100	0.06	0.12	EEVFK1V681Q	EEVFK1V681V	(3)	200
	1000	16.0	16.5	16.8	J16	1800	0.035	0.12	EEVFK1V102M	EEVFK1V102V	(3)	125
	1500	16.0	16.5	16.8	J16	1800	0.035	0.12	EEVFK1V152M	EEVFK1V152V	(3)	125
50	4.7	4.0	5.8	–	B	60	2.90	0.10	EEEFK1H4R7R	–	(1)	2000
	10	5.0	5.8	–	(C)	85	1.52	0.10	EEEFK1H100UR	–	(1)	1000
		6.3	5.8	6.1	D	165	0.88	0.10	EEEFK1H100P	EEEFK1H100V	(1)	1000
	22	6.3	5.8	6.1	D	165	0.88	0.10	EEEFK1H220P	EEEFK1H220V	(1)	1000
	33	6.3	7.7	8	D8	195	0.68	0.10	EEEFK1H330XP	EEEFK1H330XV	(1)	900
		8.0	6.2	6.5	E	195	0.68	0.10	EEEFK1H330P	EEEFK1H330V	(2)	1000
	47	6.3	7.7	8	D8	195	0.68	0.10	EEEFK1H470XP	EEEFK1H470XV	(1)	900
		8.0	6.2	6.5	E	195	0.68	0.10	EEEFK1H470P	EEEFK1H470V	(2)	1000
	100	8.0	10.2	10.5	F	350	0.34	0.10	EEEFK1H101P	EEEFK1H101V	(2)	500
	150	10.0	10.2	10.5	G	670	0.18	0.10	EEEFK1H151P	EEEFK1H151V	(2)	500
	220	10.0	10.2	10.5	G	670	0.18	0.10	EEEFK1H221P	EEEFK1H221V	(2)	500
	330	12.5	13.5	13.8	H13	900	0.12	0.10	EEVFK1H331Q	EEVFK1H331V	(3)	200
	390	12.5	13.5	13.8	H13	900	0.12	0.10	EEVFK1H391Q	EEVFK1H391V	(3)	200
	470	16.0	16.5	16.8	J16	1610	0.073	0.10	EEVFK1H471M	EEVFK1H471V	(3)	125
	560	16.0	16.5	16.8	J16	1610	0.073	0.10	EEVFK1H561M	EEVFK1H561V	(3)	125
	680	16.0	16.5	16.8	J16	1610	0.073	0.10	EEVFK1H681M	EEVFK1H681V	(3)	125
	1000	16.0	16.5	16.8	J16	1610	0.073	0.10	EEVFK1H102M	EEVFK1H102V	(3)	125
63	4.7	5.0	5.8	–	C	50	3.00	0.08	EEEFK1J4R7R	–	(1)	1000
	10	6.3	5.8	6.1	D	80	1.50	0.08	EEEFK1J100P	EEEFK1J100V	(1)	1000
	22	6.3	7.7	8	D8	120	1.20	0.08	EEEFK1J220XP	EEEFK1J220XV	(1)	900
		8.0	6.2	6.5	E	120	1.20	0.08	EEEFK1J220P	EEEFK1J220V	(2)	1000
	33	8.0	10.2	10.5	F	250	0.65	0.08	EEEFK1J330P	EEEFK1J330V	(2)	500
	47	8.0	10.2	10.5	F	250	0.65	0.08	EEEFK1J470P	EEEFK1J470V	(2)	500
	68	8.0	10.2	10.5	(F)	250	0.65	0.08	EEEFK1J680UP	EEEFK1J680UV	(2)	500
	100	10.0	10.2	10.5	G	400	0.35	0.08	EEEFK1J101P	EEEFK1J101V	(2)	500
	150	12.5	13.5	13.8	H13	800	0.16	0.08	EEVFK1J151Q	EEVFK1J151V	(3)	200
	220	12.5	13.5	13.8	H13	800	0.16	0.08	EEVFK1J221Q	EEVFK1J221V	(3)	200
	470	16.0	16.5	16.8	J16	1410	0.082	0.08	EEVFK1J471M	EEVFK1J471V	(3)	125
	680	18.0	16.5	16.8	K16	1690	0.08	0.08	EEVFK1J681M	EEVFK1J681V	(3)	125

*1: Size code( ): Miniaturization product
*2: Ripple current (100 kHz / +105 °C)
*3: Impedance (100 kHz / +20 °C)
*4: tan δ (120 Hz / +20 °C)

・Please refer to the page of "Reflow Profile" and "The Taping Dimensions".

Design and specifications are each subject to change without notice. Ask factory for the current technical specifications before purchase and/or use.
Should a safety concern arise regarding this product, please be sure to contact us immediately.

Characteristics list

Endurance : 105 °C 2000 h (ø12.5 : 5000 h)

Rated voltage (V)	Capacitance (±20 %) (μF)	Case size (mm) øD	L Standard	L Vibration-proof	Size code	Specification Ripple current*1 (mA rms)	Impe-dance*2 (Ω)	tan δ*3	Part No. Standard Product	Part No. Vibration-proof product	Reflow	Min. Packaging Q'ty (pcs) Taping
80	3.3	5.0	5.8	–	C	25	5.00	0.08	EEEFK1K3R3R	–	(1)	1000
	4.7	6.3	5.8	6.1	D	40	3.00	0.08	EEEFK1K4R7P	EEEFK1K4R7V	(1)	1000
	10	6.3	7.7	8	D8	60	2.40	0.08	EEEFK1K100XP	EEEFK1K100XV	(1)	900
		8.0	6.2	6.5	E	60	2.40	0.08	EEEFK1K100P	EEEFK1K100V	(2)	1000
	22	8.0	10.2	10.5	F	130	1.30	0.08	EEEFK1K220P	EEEFK1K220V	(2)	500
	33	8.0	10.2	10.5	F	130	1.30	0.08	EEEFK1K330P	EEEFK1K330V	(2)	500
	47	10.0	10.2	10.5	G	200	0.70	0.08	EEEFK1K470P	EEEFK1K470V	(2)	500
	68	12.5	13.5	13.8	H13	500	0.32	0.08	EEVFK1K680Q	EEVFK1K680V	(3)	200
	100	12.5	13.5	13.8	H13	500	0.32	0.08	EEVFK1K101Q	EEVFK1K101V	(3)	200
	150	12.5	13.5	13.8	H13	500	0.32	0.08	EEVFK1K151Q	EEVFK1K151V	(3)	200
	330	16.0	16.5	16.8	J16	793	0.17	0.08	EEVFK1K331M	EEVFK1K331V	(3)	125
	470	18.0	16.5	16.8	K16	917	0.153	0.08	EEVFK1K471M	EEVFK1K471V	(3)	125
100	22	8.0	10.2	10.5	F	130	1.30	0.07	EEEFK2A220P	EEEFK2A220V	(2)	500
	33	10.0	10.2	10.5	G	200	0.70	0.07	EEEFK2A330P	EEEFK2A330V	(2)	500
	47	12.5	13.5	13.8	H13	500	0.32	0.07	EEVFK2A470Q	EEVFK2A470V	(3)	200
	68	12.5	13.5	13.8	H13	500	0.32	0.07	EEVFK2A680Q	EEVFK2A680V	(3)	200
	100	16.0	16.5	16.8	J16	793	0.17	0.07	EEVFK2A101M	EEVFK2A101V	(3)	125
	150	16.0	16.5	16.8	J16	793	0.17	0.07	EEVFK2A151M	EEVFK2A151V	(3)	125
	220	18.0	16.5	16.8	K16	917	0.153	0.07	EEVFK2A221M	EEVFK2A221V	(3)	125
	330	18.0	16.5	16.8	K16	917	0.153	0.07	EEVFK2A331M	EEVFK2A331V	(3)	125

Endurance : 105 °C 5000 h

Rated voltage (V)	Capacitance (±20 %) (μF)	Case size (mm) øD	L Standard	L Vibration-proof	Size code	Specification Ripple current*1 (mA rms)	Impe-dance*2 (Ω)	tan δ*3	Part No. Standard Product	Part No. Vibration-proof product	Reflow	Min. Packaging Q'ty (pcs) Taping
6.3	470	8.0	10.2	10.5	F	600	0.16	0.26	EEEFK0J471GP	EEEFK0J471GV	(2)	500
	1000	8.0	10.2	10.5	F	600	0.16	0.26	EEEFK0J102GP	EEEFK0J102GV	(2)	500
	1500	10.0	10.2	10.5	G	850	0.08	0.26	EEEFK0J152GP	EEEFK0J152GV	(2)	500
10	330	8.0	10.2	10.5	F	600	0.16	0.19	EEEFK1A331GP	EEEFK1A331GV	(2)	500
	470	8.0	10.2	10.5	F	600	0.16	0.19	EEEFK1A471GP	EEEFK1A471GV	(2)	500
	680	8.0	10.2	10.5	F	600	0.16	0.19	EEEFK1A681GP	EEEFK1A681GV	(2)	500
	1000	10.0	10.2	10.5	G	850	0.08	0.19	EEEFK1A102GP	EEEFK1A102GV	(2)	500
16	330	8.0	10.2	10.5	F	600	0.16	0.16	EEEFK1C331GP	EEEFK1C331GV	(2)	500
	470	8.0	10.2	10.5	F	600	0.16	0.16	EEEFK1C471GP	EEEFK1C471GV	(2)	500
	680	10.0	10.2	10.5	G	850	0.08	0.16	EEEFK1C681GP	EEEFK1C681GV	(2)	500
25	150	8.0	10.2	10.5	F	600	0.16	0.14	EEEFK1E151GP	EEEFK1E151GV	(2)	500
	220	8.0	10.2	10.5	F	600	0.16	0.14	EEEFK1E221GP	EEEFK1E221GV	(2)	500
	330	8.0	10.2	10.5	F	600	0.16	0.14	EEEFK1E331GP	EEEFK1E331GV	(2)	500
	470	10.0	10.2	10.5	G	850	0.08	0.14	EEEFK1E471GP	EEEFK1E471GV	(2)	500
35	100	8.0	10.2	10.5	F	600	0.16	0.12	EEEFK1V101GP	EEEFK1V101GV	(2)	500
	150	8.0	10.2	10.5	F	600	0.16	0.12	EEEFK1V151GP	EEEFK1V151GV	(2)	500
	220	8.0	10.2	10.5	F	600	0.16	0.12	EEEFK1V221GP	EEEFK1V221GV	(2)	500
	330	10.0	10.2	10.5	G	850	0.08	0.12	EEEFK1V331GP	EEEFK1V331GV	(2)	500
50	100	8.0	10.2	10.5	F	350	0.34	0.10	EEEFK1H101GP	EEEFK1H101GV	(2)	500
	150	10.0	10.2	10.5	G	670	0.18	0.10	EEEFK1H151GP	EEEFK1H151GV	(2)	500
	220	10.0	10.2	10.5	G	670	0.18	0.10	EEEFK1H221GP	EEEFK1H221GV	(2)	500

*1: Size code( ): Miniaturization product
*2: Ripple current (100 kHz / +105 °C)
*3: Impedance (100 kHz / +20 °C)
*4: tan δ (120 Hz / +20 °C)

・Please refer to the page of "Reflow Profile" and "The Taping Dimensions".

Design and specifications are each subject to change without notice. Ask factory for the current technical specifications before purchase and/or use.
Should a safety concern arise regarding this product, please be sure to contact us immediately.

Panasonic
INDUSTRY

Aluminum Electrolytic Capacitors

Surface Mount Type

Halogen-free FK series

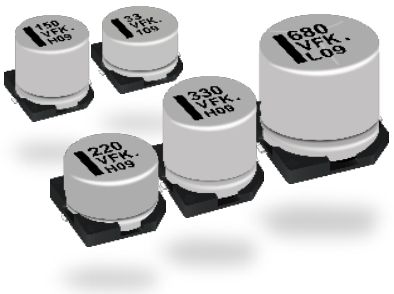

Features

- Endurance : 105 °C 2000 h to 5000 h
- Low impedance（40 % to 60 % less than FC series）
- Miniaturized (30 % to 50 % less than FC series)
- AEC-Q200 compliant
- RoHS compliant

Country of origin

- Malaysia

Specifications

Category temp. range	–55 °C to +105 °C										
Rated voltage range	6.3 V to 100 V										
Capacitance range	4.7 µF to 1500 µF										
Capacitance tolerance	±20 % (120 Hz / +20 °C)										
Leakage current	I ≤ 0.01 CV or 3 (µA), whichever is greater, 2 minutes after reaching rated voltage, 20 °C *CV = (Capacitance in µF) x (Rated voltage in V)										
Dissipation factor (tan δ)	Please see the attached characteristics list										
Characteristics at low temperature	Rated voltage (V)	6.3	10	16	25	35	50	63	80	100	(Impedance ratio at 120 Hz)
	Z (–25 °C) / Z (+20 °C)	2	2	2	2	2	2	2	2	2	
	Z (–40 °C) / Z (+20 °C)	3	3	3	3	3	3	3	3	3	
	Z (–55 °C) / Z (+20 °C)	4	4	4	3	3	3	3	3	3	
Endurance	After applying rated working voltage for 2000 hours at +105 °C ± 2 °C and then being stabilized at +20 °C, capacitors shall meet the following limits.(Suffix "G" is 5000 h)										
	Capacitance change	Within ±30 % of the initial value (Suffix “G” is 35 %)									
	Dissipation factor (tan δ)	≤ 200 % of the initial limit (Suffix “G” is 300 %)									
	Leakage current	Within the initial limit									
Shelf life	After storage for 1000 hours at +105 °C ± 2 °C with no voltage applied and then being stabilized at +20 °C, capacitors shall meet the limits specified in endurance. (Capacitors are left at room temperature and humidity for 2 hours after the test. Then, apply the rated voltage for 30min with a series protection resistance of 1000 Ω ± 10 Ω. Measure electrical characteristics after discharging the capacitor.)										
Resistance to soldering heat	After reflow soldering and then being stabilized at +20 °C, capacitors shall meet the following limits.										
	Capacitance change	Within ±10 % of the initial value									
	Dissipation factor (tan δ)	Within the initial limit									
	Leakage current	Within the initial limit									

Frequency correction factor for ripple current

Frequency (Hz)	50, 60	120	1 k	10 k	100 k to
Correction factor	0.70	0.75	0.90	0.95	1.00

Marking

Example : 50 V 10 µF
Marking color : BLACK

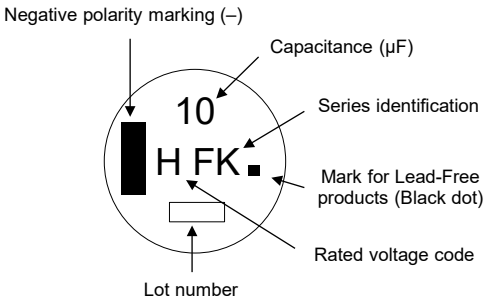

R. voltage code

j	6.3	H	50
A	10	J	63
C	16	K	80
E	25	2A	100
V	35		

Unit : V

Dimensions

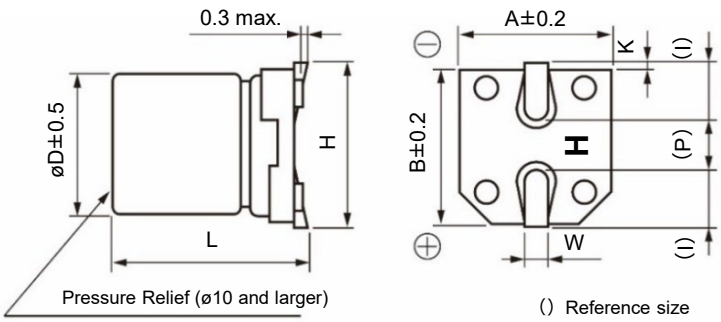

Unit : mm

Size code	øD	L	A, B	H	I	W	P	K
D	6.3	5.8±0.3	6.6	7.8 max.	2.6	0.65±0.1	1.8	$0.35^{+0.15}_{-0.20}$
D8	6.3	7.7±0.3	6.6	7.8 max.	2.6	0.65±0.1	1.8	$0.35^{+0.15}_{-0.20}$
E	8.0	6.2±0.3	8.3	9.5 max.	3.4	0.65±0.1	2.2	$0.35^{+0.15}_{-0.20}$
F	8.0	10.2±0.3	8.3	10.0 max.	3.4	0.90±0.2	3.1	0.70±0.2
G	10.0	10.2±0.3	10.3	12.0 max.	3.5	0.90±0.2	4.6	0.70±0.2

Design and specifications are each subject to change without notice. Ask factory for the current technical specifications before purchase and/or use.
Should a safety concern arise regarding this product, please be sure to contact us immediately.

Explanation of part numbers

◇ Part number system

e.g.: EEEFK1H330XL

EEE	FK	1H	330	X	L
Product classification	Series / Code	Rated voltage (V) / Code	Capacitance (μF) / Code	Special code / Code	Configuration / Code

Series	Code
FK	FK

Rated voltage (V)	Code
6.3	0J
10	1A
16	1C
25	1E
35	1V
50	1H
63	1J
80	1K
100	2A

Capacitance (μF)	Code	Capacitance (μF)	Code
4.7	100	150	151
10	100	220	221
22	220	330	331
33	330	470	471
47	470	680	681
68	680	1000	102
100	101	1500	152

Special code	Code
Miniaturized product	U
D8 size	X
5000 h	G
Others	–

Configuration	Code
Halogen-free	L

Characteristics list

Endurance : 105 °C 2000 h

Rated voltage (V)	Capacitance (±20 %) (μF)	Case size (mm) øD	Case size (mm) L	Size code*1	Specification: Ripple current*2 (mA rms)	Specification: Impedance*3 (Ω)	Specification: tanδ*4	Part number	Reflow	Min. Packaging Q'ty (pcs) Taping
50	10	6.3	5.8	D	165	0.88	0.10	EEEFK1H100L	(1)	1000
	22	6.3	5.8	D	165	0.88	0.10	EEEFK1H220L	(1)	1000
	33	6.3	7.7	D8	195	0.68	0.10	EEEFK1H330XL	(1)	900
		8.0	6.2	E	195	0.68	0.10	EEEFK1H330L	(2)	1000
	47	6.3	7.7	D8	195	0.68	0.10	EEEFK1H470XL	(1)	900
		8.0	6.2	E	195	0.68	0.10	EEEFK1H470L	(2)	1000
	100	8.0	10.2	F	350	0.34	0.10	EEEFK1H101L	(2)	500
	150	10.0	10.2	G	670	0.18	0.10	EEEFK1H151L	(2)	500
	220	10.0	10.2	G	670	0.18	0.10	EEEFK1H221L	(2)	500
63	10	6.3	5.8	D	80	1.50	0.08	EEEFK1J100L	(1)	1000
	22	6.3	7.7	D8	120	1.20	0.08	EEEFK1J220XL	(1)	900
		8.0	6.2	E	120	1.20	0.08	EEEFK1J220L	(2)	1000
	33	8.0	10.2	F	250	0.65	0.08	EEEFK1J330L	(2)	500
	47	8.0	10.2	F	250	0.65	0.08	EEEFK1J470L	(2)	500
	68	8.0	10.2	(F)	250	0.65	0.08	EEEFK1J680UL	(2)	500
	100	10.0	10.2	G	400	0.35	0.08	EEEFK1J101L	(2)	500
80	4.7	6.3	5.8	D	40	3.00	0.08	EEEFK1K4R7L	(1)	1000
	10	6.3	7.7	D8	60	2.40	0.08	EEEFK1K100XL	(1)	900
		8.0	6.2	E	60	2.40	0.08	EEEFK1K100L	(2)	1000
	22	8.0	10.2	F	130	1.30	0.08	EEEFK1K220L	(2)	500
	33	8.0	10.2	F	130	1.30	0.08	EEEFK1K330L	(2)	500
	47	10.0	10.2	G	200	0.70	0.08	EEEFK1K470L	(2)	500
100	22	8.0	10.2	F	130	1.30	0.07	EEEFK2A220L	(2)	500
	33	10.0	10.2	G	200	0.70	0.07	EEEFK2A330L	(2)	500

*1: Size code( ): Miniaturization product
*2: Ripple current (100 kHz / +105 °C)
*3: Impedance (100 kHz / +20 °C)
*4: tan δ (120 Hz / +20 °C)
・Please refer to the page of "Reflow Profile" and "The Taping Dimensions".

Design and specifications are each subject to change without notice. Ask factory for the current technical specifications before purchase and/or use.
Should a safety concern arise regarding this product, please be sure to contact us immediately.

Characteristics list

Endurance : 105 °C 5000 h

Rated voltage (V)	Capacitance (±20 %) (μF)	Case size (mm)		Size code*1	Specification			Part number	Reflow	Min. Packaging Q'ty (pcs)
		øD	L		Ripple current*2 (mA rms)	Impedance*3 (Ω)	tanδ*4			Taping
6.3	470	8.0	10.2	F	600	0.16	0.26	EEEFK0J471GL	(2)	500
	1000	8.0	10.2	F	600	0.16	0.26	EEEFK0J102GL	(2)	500
	1500	10.0	10.2	G	850	0.08	0.26	EEEFK0J152GL	(2)	500
10	330	8.0	10.2	F	600	0.16	0.19	EEEFK1A331GL	(2)	500
	470	8.0	10.2	F	600	0.16	0.19	EEEFK1A471GL	(2)	500
	680	8.0	10.2	F	600	0.16	0.19	EEEFK1A681GL	(2)	500
	1000	10.0	10.2	G	850	0.08	0.19	EEEFK1A102GL	(2)	500
16	330	8.0	10.2	F	600	0.16	0.16	EEEFK1C331GL	(2)	500
	470	8.0	10.2	F	600	0.16	0.16	EEEFK1C471GL	(2)	500
	680	10.0	10.2	G	850	0.08	0.16	EEEFK1C681GL	(2)	500
25	150	8.0	10.2	F	600	0.16	0.14	EEEFK1E151GL	(2)	500
	220	8.0	10.2	F	600	0.16	0.14	EEEFK1E221GL	(2)	500
	330	8.0	10.2	F	600	0.16	0.14	EEEFK1E331GL	(2)	500
	470	10.0	10.2	G	850	0.08	0.14	EEEFK1E471GL	(2)	500
35	100	8.0	10.2	F	600	0.16	0.12	EEEFK1V101GL	(2)	500
	150	8.0	10.2	F	600	0.16	0.12	EEEFK1V151GL	(2)	500
	220	8.0	10.2	F	600	0.16	0.12	EEEFK1V221GL	(2)	500
	330	10.0	10.2	G	850	0.08	0.12	EEEFK1V331GL	(2)	500
50	100	8.0	10.2	F	350	0.34	0.10	EEEFK1H101GL	(2)	500
	150	10.0	10.2	G	670	0.18	0.10	EEEFK1H151GL	(2)	500
	220	10.0	10.2	G	670	0.18	0.10	EEEFK1H221GL	(2)	500

*1: Size code( ): Miniaturization product
*2: Ripple current (100 kHz / +105 °C)
*3: Impedance (100 kHz / +20 °C)
*4: tan δ (120 Hz / +20 °C)
・Please refer to the page of "Reflow Profile" and "The Taping Dimensions".

Panasonic INDUSTRY

This series is not a recommended product.
Not recommended for new design.

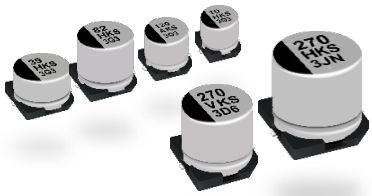

Aluminum Electrolytic Capacitors

Surface Mount Type

FKS series **6.3 V to 50 V : High temperature Lead-Free reflow**

63 V to 100 V : Standard Lead-Free reflow

Features

- Endurance : 105 °C 2000 h
- 1 size smaller than series FK
- Vibration-proof product (30G guaranteed) is available upon request (ø6.3 ≤)
- AEC-Q200 compliant
- RoHS compliant

Specifications

Category temp. range	–55 °C to +105 °C										
Rated voltage range	6.3 V to 100 V										
Capacitance range	10 µF to 1800 µF										
Capacitance tolerance	±20 % (120 Hz / +20 °C)										
Leakage current	I ≤ 0.01 CV or 3 (µA), whichever is greater, 2 minutes after reaching rated voltage, 20 °C *CV = (Capacitance in µF) x (Rated voltage in V)										
Dissipation factor (tan δ)	Please see the attached characteristics list										
Characteristics at low temperature	Rated voltage (V)	6.3	10	16	25	35	50	63	80	100	(Impedance ratio at 120 Hz)
	Z (–25 °C) / Z (+20 °C)	2	2	2	2	2	2	2	2	2	
	Z (–40 °C) / Z (+20 °C)	3	3	3	3	3	3	3	3	3	
	Z (–55 °C) / Z (+20 °C)	4	4	4	3	3	3	3	3	3	
Endurance	After applying rated working voltage for 2000 hours at +105 °C ± 2 °C and then being stabilized at +20 °C, capacitors shall meet the following limits.										
	Capacitance change	Within ±30 % of the initial value (6.3 V of B, C size : Within ±40 %)									
	Dissipation factor (tan δ)	≤ 200 % of the initial limit									
	Leakage current	Within the initial limit									
Shelf life	After storage for 1000 hours at +105 °C ± 2 °C with no voltage applied and then being stabilized at +20 °C, capacitors shall meet the limits specified in endurance. (Capacitors are left at room temperature and humidity for 2 hours after the test. Then, apply the rated voltage for 30min with a series protection resistance of 1000 Ω ± 10 Ω. Measure electrical characteristics after discharging the capacitor.)										
Resistance to soldering heat	After reflow soldering and then being stabilized at +20 °C, capacitors shall meet the following limits.										
	Capacitance change	Within ±10 % of the initial value									
	Dissipation factor (tan δ)	Within the initial limit									
	Leakage current	Within the initial limit									

Frequency correction factor for ripple current

Frequency (Hz)	120	1 k	10 k	100 k to
Correction factor	0.65	0.85	0.95	1.00

Marking

Example : 6.3 V 270 µF
Marking color : BLACK

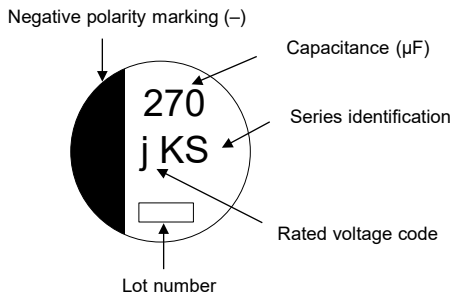

R.voltage code

j	6.3
A	10
C	16
E	25
V	35

Unit : V

H	50
J	63
K	80
2A	100

Dimensions

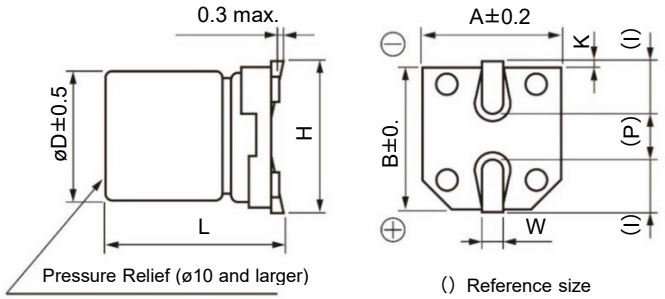

Unit : mm

Size code	øD	L	A、B	H	I	W	P	K
B	4.0	5.8±0.3	4.3	5.5 max.	1.8	0.65±0.1	1.0	$0.35^{+0.15}_{-0.20}$
C	5.0	5.8±0.3	5.3	6.5 max.	2.2	0.65±0.1	1.5	$0.35^{+0.15}_{-0.20}$
D	6.3	5.8±0.3	6.6	7.8 max.	2.6	0.65±0.1	1.8	$0.35^{+0.15}_{-0.20}$
D8	6.3	7.7±0.3	6.6	7.8 max.	2.6	0.65±0.1	1.8	$0.35^{+0.15}_{-0.20}$
F	8.0	10.2±0.3	8.3	10.0 max.	3.4	0.90±0.2	3.1	0.70±0.2
G	10.0	10.2±0.3	10.3	12.0 max.	3.5	0.90±0.2	4.6	0.70±0.2

・The dimensions of the vibration-proof products, please refer to the page of the mounting specification.

Design and specifications are each subject to change without notice. Ask factory for the current technical specifications before purchase and/or use.
Should a safety concern arise regarding this product, please be sure to contact us immediately.

Explanation of part numbers

◇ Part number system

e.g.: EEEFK0J680SR

EEE	FK	0J	680	S	R
Product classification	Series / Code	Rated voltage (V) / Code*	Capacitance (μF) / Code	Special code / Code	Tape width (mm) / Code

Series	Code
FK	FK

Rated voltage (V)	Code*
6.3	0J(J)
10	1A(A)
16	1C(C)
25	1E(E)
35	1V(V)
50	1H(H)
63	1J
80	1K(K)
100	2A

Capacitance (μF)	Code	Capacitance (μF)	Code
10	100	220	221
18	180	270	271
22	220	330	331
27	270	390	391
39	390	470	471
47	470	560	561
56	560	680	681
68	680	820	821
82	820	1000	102
100	101	1200	122
120	121	1500	152
150	151	1800	182
180	181		

Special code	Code
FKS series	S

Tape width (mm)	Code
12	R
16, 24	P

Replace for the following configuration

Configuration	Code
Vibration proof	V

*: The text "0" or "1" is omitted when the part number exceeds 12 figures.
0J →J, 1A→A, 1C→C, 1E→E, 1V→V, 1H→H, 1K→K

Characteristics list

■ 6.3 V to 50 V (High temperature reflow)

Endurance : 105 °C 2000 h

Rated voltage (V)	Capacitance (±20 %) (μF)	Case size (mm) øD	Case size (mm) L Standard	Case size (mm) L Vibration-proof	Size code	Specification Ripple current*1 (mA rms)	Specification ESR*2 (Ω)	Specification tan δ*3	Part No. Standard Product	Part No. Vibration-proof product	Reflow	Min. Packaging Q'ty (pcs) Taping
6.3	68	4.0	5.8	–	B	90	1.35	0.26	EEEFK0J680SR	–	(5)	2000
	150	5.0	5.8	–	C	160	0.70	0.26	EEEFK0J151SR	–	(5)	1000
	270	6.3	5.8	6.1	D	240	0.36	0.26	EEEFK0J271SP	EEEFK0J271SV	(5)	1000
	470	6.3	7.7	8.0	D8	280	0.34	0.26	EEEFKJ471XSP	EEEFKJ471XSV	(5)	900
	1800	10.0	10.2	10.5	G	850	0.08	0.26	EEEFK0J182SP	EEEFK0J182SV	(6)	500
10	56	4.0	5.8	–	B	90	1.35	0.19	EEEFK1A560SR	–	(5)	2000
	120	5.0	5.8	–	C	160	0.70	0.19	EEEFK1A121SR	–	(5)	1000
	220	6.3	5.8	6.1	D	240	0.36	0.19	EEEFK1A221SP	EEEFK1A221SV	(5)	1000
	330	6.3	7.7	8.0	D8	280	0.34	0.19	EEEFKA331XSP	EEEFKA331XSV	(5)	900
	820	8.0	10.2	10.5	F	600	0.16	0.19	EEEFK1A821SP	EEEFK1A821SV	(6)	500
	1200	10.0	10.2	10.5	G	850	0.08	0.19	EEEFK1A122SP	EEEFK1A122SV	(6)	500
	1500	10.0	10.2	10.5	G	850	0.08	0.19	EEEFK1A152SP	EEEFK1A152SV	(6)	500
16	47	4.0	5.8	–	B	90	1.35	0.16	EEEFK1C470SR	–	(5)	2000
	100	5.0	5.8	–	C	160	0.70	0.16	EEEFK1C101SR	–	(5)	1000
	150	6.3	5.8	6.1	D	240	0.36	0.16	EEEFK1C151SP	EEEFK1C151SV	(5)	1000
	270	6.3	7.7	8.0	D8	280	0.34	0.16	EEEFKC271XSP	EEEFKC271XSV	(5)	900
	560	8.0	10.2	10.5	F	600	0.16	0.16	EEEFK1C561SP	EEEFK1C561SV	(6)	500
	680	8.0	10.2	10.5	F	600	0.16	0.16	EEEFK1C681SP	EEEFK1C681SV	(6)	500
	1000	10.0	10.2	10.5	G	850	0.08	0.16	EEEFK1C102SP	EEEFK1C102SV	(6)	500

*1: Ripple current (100 kHz / +105 °C)
*2: ESR (100 kHz / +20 °C)
*3: tan δ (120 Hz / +20 °C)
・Please refer to the page of "Reflow Profile" and "The Taping Dimensions".

Design and specifications are each subject to change without notice. Ask factory for the current technical specifications before purchase and/or use.
Should a safety concern arise regarding this product, please be sure to contact us immediately.

Characteristics list

■ 6.3 V to 50 V (High temperature reflow)

Endurance : 105 °C 2000 h

Rated voltage (V)	Capacitance (±20 %) (μF)	Case size (mm) øD	Case size (mm) L Standard	Case size (mm) L Vibration-proof	Size code	Specification Ripple current*1 (mA rms)	Specification ESR*2 (Ω)	Specification tan δ*3	Part No. Standard Product	Part No. Vibration-proof product	Reflow	Min. Packaging Q'ty (pcs) Taping
25	27	4.0	5.8	–	B	90	1.35	0.14	EEEFK1E270SR	–	(5)	2000
	56	5.0	5.8	–	C	160	0.70	0.14	EEEFK1E560SR	–	(5)	1000
	100	6.3	5.8	6.1	D	240	0.36	0.14	EEEFK1E101SP	EEEFK1E101SV	(5)	1000
	150	6.3	7.7	8.0	D8	280	0.34	0.14	EEEFKE151XSP	EEEFKE151XSV	(5)	900
	180	6.3	7.7	8.0	D8	280	0.34	0.14	EEEFKE181XSP	EEEFKE181XSV	(5)	900
	390	8.0	10.2	10.5	F	600	0.16	0.14	EEEFK1E391SP	EEEFK1E391SV	(6)	500
	470	8.0	10.2	10.5	F	600	0.16	0.14	EEEFK1E471SP	EEEFK1E471SV	(6)	500
	680	10.0	10.2	10.5	G	850	0.08	0.14	EEEFK1E681SP	EEEFK1E681SV	(6)	500
	820	10.0	10.2	10.5	G	850	0.08	0.14	EEEFK1E821SP	EEEFK1E821SV	(6)	500
35	18	4.0	5.8	–	B	90	1.35	0.12	EEEFK1V180SR	–	(5)	2000
	39	5.0	5.8	–	C	160	0.70	0.12	EEEFK1V390SR	–	(5)	1000
	68	6.3	5.8	6.1	D	240	0.36	0.12	EEEFK1V680SP	EEEFK1V680SV	(5)	1000
	82	6.3	5.8	6.1	D	240	0.36	0.12	EEEFK1V820SP	EEEFK1V820SV	(5)	1000
	120	6.3	7.7	8.0	D8	280	0.34	0.12	EEEFKV121XSP	EEEFKV121XSV	(5)	900
	270	8.0	10.2	10.5	F	600	0.16	0.12	EEEFK1V271SP	EEEFK1V271SV	(6)	500
	330	8.0	10.2	10.5	F	600	0.16	0.12	EEEFK1V331SP	EEEFK1V331SV	(6)	500
	470	10.0	10.2	10.5	G	850	0.08	0.12	EEEFK1V471SP	EEEFK1V471SV	(6)	500
	560	10.0	10.2	10.5	G	850	0.08	0.12	EEEFK1V561SP	EEEFK1V561SV	(6)	500
50	10	4.0	5.8	–	B	60	3.50	0.10	EEEFK1H100SR	–	(5)	2000
	22	5.0	5.8	–	C	85	1.52	0.10	EEEFK1H220SR	–	(5)	1000
	39	6.3	5.8	6.1	D	165	0.88	0.10	EEEFK1H390SP	EEEFK1H390SV	(5)	1000
	82	6.3	7.7	8.0	D8	195	0.68	0.10	EEEFKH820XSP	EEEFKH820XSV	(5)	900
	180	8.0	10.2	10.5	F	350	0.34	0.10	EEEFK1H181SP	EEEFK1H181SV	(6)	500
	270	10.0	10.2	10.5	G	670	0.18	0.10	EEEFK1H271SP	EEEFK1H271SV	(6)	500

■ 63 V to 100 V (Standard reflow)

Endurance : 105 °C 2000 h

Rated voltage (V)	Capacitance (±20 %) (μF)	Case size (mm) øD	Case size (mm) L Standard	Case size (mm) L Vibration-proof	Size code	Specification Ripple current*1 (mA rms)	Specification ESR*2 (Ω)	Specification tan δ*3	Part No. Standard Product	Part No. Vibration-proof product	Reflow	Min. Packaging Q'ty (pcs) Taping
63	120	10.0	10.2	10.5	G	400	0.35	0.08	EEEFK1J121SP	EEEFK1J121SV	(2)	500
80	47	8.0	10.2	10.5	F	130	1.30	0.08	EEEFK1K470SP	EEEFK1K470SV	(2)	500
	82	10.0	10.2	10.5	G	200	0.70	0.08	EEEFK1K820SP	EEEFK1K820SV	(2)	500
100	27	8.0	10.2	10.5	F	130	1.30	0.07	EEEFK2A270SP	EEEFK2A270SV	(2)	500
	47	10.0	10.2	10.5	G	200	0.70	0.07	EEEFK2A470SP	EEEFK2A470SV	(2)	500

*1: Ripple current (100 kHz / +105 °C)
*2: ESR (100 kHz / +20 °C)
*3: tan δ (120 Hz / +20 °C)
・Please refer to the page of "Reflow Profile" and "The Taping Dimensions".

Design and specifications are each subject to change without notice. Ask factory for the current technical specifications before purchase and/or use.
Should a safety concern arise regarding this product, please be sure to contact us immediately.

Panasonic INDUSTRY

Some part numbers are not a recommended product.
Not recommended for new design.

Aluminum Electrolytic Capacitors

Surface Mount Type

FKS series (Medium-size)

High temperature Lead-Free reflow

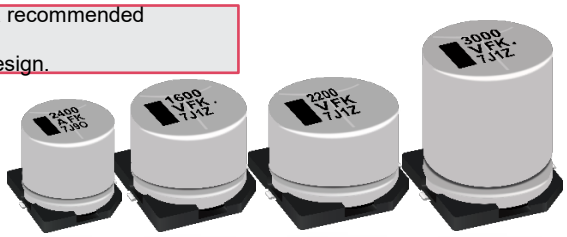

Features

- Endurance : 105 °C 5000 h
- High capacitance : 20 to 80 % higher than FK series, large capacitance up to 13000 µF
- Vibration-proof product (30G guaranteed) is available upon request
- AEC-Q200 compliant
- RoHS compliant

Specifications

Category temp. range	–55 °C to +105 °C						
Rated voltage range	6.3 V to 35 V						
Capacitance range	750 µF to 13000 µF						
Capacitance tolerance	±20 % (120 Hz / +20 °C)						
Leakage current	I ≤ 0.01 CV (µA) After 2 minutes						
Dissipation factor (tan δ)	Please see the attached characteristics list						
Characteristics at low temperature	Rated voltage (V)	6.3	10	16	25	35	(Impedance ratio at 120 Hz)
	Z (–25 °C) / Z (+20 °C)	2	2	2	2	2	
	Z (–40 °C) / Z (+20 °C)	3	3	3	3	3	
	Z (–55 °C) / Z (+20 °C)	4	4	4	3	3	
Endurance	After applying rated working voltage for 5000 hours at +105 °C ± 2 °C and then being stabilized at +20 °C, capacitors shall meet the following limits.						
	Capacitance change	Within ±30 % of the initial value					
	Dissipation factor (tan δ)	≤ 300 % of the initial limit					
	Leakage current	Within the initial limit					
Shelf life	After storage for 1000 hours at +105 °C ± 2 °C with no voltage applied and then being stabilized at +20 °C, capacitors shall meet the following limits. (Capacitors are left at room temperature and humidity for 2 hours after the test. Then, apply the rated voltage for 30min with a series protection resistance of 1000 Ω ± 10 Ω. Measure electrical characteristics after discharging the capacitor.)						
	Capacitance change	Within ±30 % of the initial value					
	Dissipation factor (tan δ)	≤ 200 % of the initial limit					
	Leakage current	Within the initial limit					
Resistance to soldering heat	After reflow soldering and then being stabilized at +20 °C, capacitors shall meet the following limits.						
	Capacitance change	Within ±10 % of the initial value					
	Dissipation factor (tan δ)	Within the initial limit					
	Leakage current	Within the initial limit					

Frequency correction factor for ripple current

Frequency (Hz)	120	1 k	10 k	100 k to
Correction factor	0.75	0.90	0.95	1.00

Marking

Example : 6.3 V 3500 µF
Marking color : BLACK

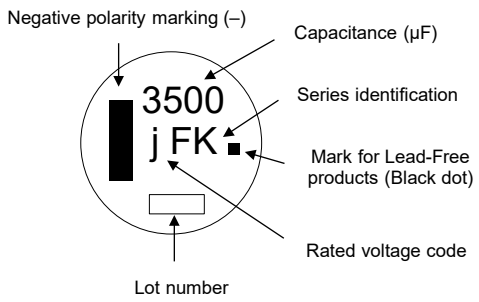

R.voltage code

j	6.3	E	25
A	10	V	35
C	16		

Unit : V

Dimensions

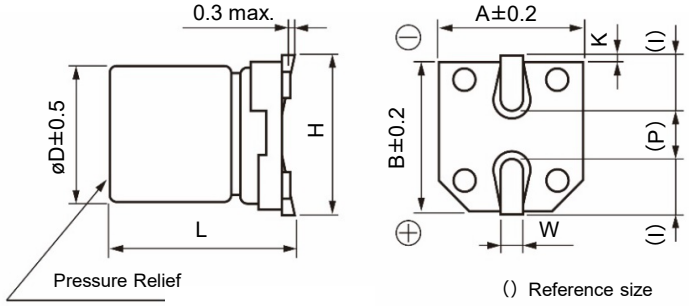

Unit : mm

Size code	øD	L	A, B	H	I	W	P	K
H13	12.5	13.5±0.5	13.5	15.0 max.	4.7	0.90±0.3	4.4	0.70±0.3
J16	16.0	16.5±0.5	17.0	19.0 max.	5.5	1.20±0.3	6.7	0.70±0.3
K16	18.0	16.5±0.5	19.0	21.0 max.	6.7	1.20±0.3	6.7	0.70±0.3
K21	18.0	21.5±0.5	19.0	21.0 max.	6.7	1.20±0.3	6.7	0.70±0.3

・The dimensions of the vibration-proof products, please refer to the page of the mounting specification.

Design and specifications are each subject to change without notice. Ask factory for the current technical specifications before purchase and/or use.
Should a safety concern arise regarding this product, please be sure to contact us immediately.

Explanation of part numbers

◇ Part number system

e.g.: EEEFK0J352SQ

EEE — Product classification

FK

Series	Code
FK	FK

0J

Rated voltage (V)	Code
6.3	0J
10	1A
16	1C
25	1E
35	1V

352

Capacitance (μF)	Code	Capacitance (μF)	Code
750	751	3600	362
1200	122	4300	432
1600	162	4700	472
1800	182	5600	562
2200	222	7500	752
2400	242	9100	912
2700	272	10000	103
3000	302	13000	133
3500	352		

S

Special code	Code
FKS series	S

Q

Tape width (mm)	Code
32	Q
44	M

Replace for the following configuration

Configuration	Code
Vibration proof	V

Characteristics list

Endurance : 105 °C 5000 h

Rated voltage (V)	Capacitance (±20 %) (μF)	Case size (mm) øD	L Standard	L Vibration-proof	Size code	Specification Ripple current*1 (mA rms)	Impedance*2 (Ω)	tan δ*3	Part No. Standard Product	Part No. Vibration-proof product	Reflow	Min. Packaging Q'ty (pcs) Taping
6.3	3500	12.5	13.5	13.8	H13	1100	0.06	0.30	EEEFK0J352SQ	EEEFK0J352SV	(9)	200
	7500	16.0	16.5	16.8	J16	1800	0.035	0.38	EEEFK0J752SM	EEEFK0J752SV	(9)	125
	10000	18.0	16.5	16.8	K16	2060	0.033	0.42	EEEFK0J103SM	EEEFK0J103SV	(9)	125
	NRFND 13000	18.0	21.5	21.8	K21	2640	0.025	0.50	EEEFK0J133SM	EEEFK0J133SV	(9)	75
10	2400	12.5	13.5	13.8	H13	1100	0.06	0.21	EEEFK1A242SQ	EEEFK1A242SV	(9)	200
	5600	16.0	16.5	16.8	J16	1800	0.035	0.27	EEEFK1A562SM	EEEFK1A562SV	(9)	125
	7500	18.0	16.5	16.8	K16	2060	0.033	0.31	EEEFK1A752SM	EEEFK1A752SV	(9)	125
	NRFND 9100	18.0	21.5	21.8	K21	2640	0.025	0.35	EEEFK1A912SM	EEEFK1A912SV	(9)	75
16	1800	12.5	13.5	13.8	H13	1100	0.06	0.16	EEEFK1C182SQ	EEEFK1C182SV	(9)	200
	4300	16.0	16.5	16.8	J16	1800	0.035	0.22	EEEFK1C432SM	EEEFK1C432SV	(9)	125
	5600	18.0	16.5	16.8	K16	2060	0.033	0.24	EEEFK1C562SM	EEEFK1C562SV	(9)	125
	NRFND 7500	18.0	21.5	21.8	K21	2640	0.025	0.28	EEEFK1C752SM	EEEFK1C752SV	(9)	75
25	1200	12.5	13.5	13.8	H13	1100	0.06	0.14	EEEFK1E122SQ	EEEFK1E122SV	(9)	200
	2700	16.0	16.5	16.8	J16	1800	0.035	0.16	EEEFK1E272SM	EEEFK1E272SV	(9)	125
	3600	18.0	16.5	16.8	K16	2060	0.033	0.18	EEEFK1E362SM	EEEFK1E362SV	(9)	125
	NRFND 4700	18.0	21.5	21.8	K21	2640	0.025	0.20	EEEFK1E472SM	EEEFK1E472SV	(9)	75
35	750	12.5	13.5	13.8	H13	1100	0.06	0.12	EEEFK1V751SQ	EEEFK1V751SV	(9)	200
	1600	16.0	16.5	16.8	J16	1800	0.035	0.14	EEEFK1V162SM	EEEFK1V162SV	(9)	125
	2200	18.0	16.5	16.8	K16	2060	0.033	0.14	EEEFK1V222SM	EEEFK1V222SV	(9)	125
	NRFND 3000	18.0	21.5	21.8	K21	2640	0.025	0.16	EEEFK1V302SM	EEEFK1V302SV	(9)	75

*1: Ripple current (100 kHz / +105 °C)
*2: Impedance (100 kHz / +20 °C)
*3: tan δ (120 Hz / +20 °C)
・Please refer to the page of "Reflow Profile" and "The Taping Dimensions".

NRFND Not recommended for new design

Design and specifications are each subject to change without notice. Ask factory for the current technical specifications before purchase and/or use.
Should a safety concern arise regarding this product, please be sure to contact us immediately.

Panasonic
INDUSTRY

This series is not a recommended product.
Not recommended for new design.

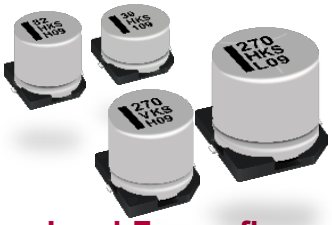

Aluminum Electrolytic Capacitors

Surface Mount Type

Halogen-free FKS series

6.3 V to 50 V : High temperature Lead-Free reflow

63 V to 100 V : Standard Lead-Free reflow

Features

- Endurance : 105 °C 2000 h
- 1 size smaller than series FK
- AEC-Q200 compliant
- RoHS compliant

Country of origin

- Malaysia

Specifications

Category temp. range	–55 °C to +105 °C											
Rated voltage range	6.3 V to 100 V											
Capacitance range	27 µF to 1800 µF											
Capacitance tolerance	±20 % (120 Hz / +20 °C)											
Leakage current	I ≤ 0.01 CV or 3 (µA), whichever is greater, 2 minutes after reaching rated voltage, 20 °C *CV = (Capacitance in µF) x (Rated voltage in V)											
Dissipation factor (tan δ)	Please see the attached characteristics list											
Characteristics at low temperature	Rated voltage (V)	6.3	10	16	25	35	50	63	80	100	(Impedance ratio at 120 Hz)	
	Z (–25 °C) / Z (+20 °C)	2	2	2	2	2	2	2	2	2		
	Z (–40 °C) / Z (+20 °C)	3	3	3	3	3	3	3	3	3		
	Z (–55 °C) / Z (+20 °C)	4	4	4	3	3	3	3	3	3		
Endurance	After applying rated working voltage for 2000 hours at +105 °C ± 2 °C and then being stabilized at +20 °C, capacitors shall meet the following limits.											
	Capacitance change	Within ±30 % of the initial value										
	Dissipation factor (tan δ)	≤ 200 % of the initial limit										
	Leakage current	Within the initial limit										
Shelf life	After storage for 1000 hours at +105 °C ± 2 °C with no voltage applied and then being stabilized at +20 °C, capacitors shall meet the limits specified in endurance. (Capacitors are left at room temperature and humidity for 2 hours after the test. Then, apply the rated voltage for 30min with a series protection resistance of 1000 Ω ± 10 Ω. Measure electrical characteristics after discharging the capacitor.)											
Resistance to soldering heat	After reflow soldering and then being stabilized at +20 °C, capacitors shall meet the following limits.											
	Capacitance change	Within ±10 % of the initial value										
	Dissipation factor (tan δ)	Within the initial limit										
	Leakage current	Within the initial limit										

Frequency correction factor for ripple current

Frequency (Hz)	120	1 k	10 k	100 k to
Correction factor	0.65	0.85	0.95	1.00

Marking

Example : 6.3 V 270 µF
Marking color : BLACK

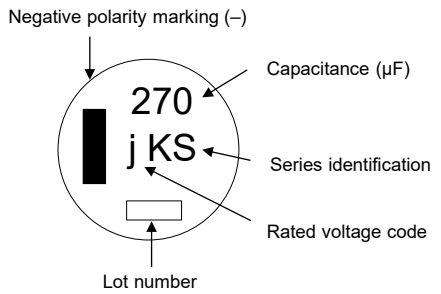

R.voltage code

Unit : V

j	6.3	H	50
A	10	J	63
C	16	K	80
E	25	2A	100
V	35		

Dimensions

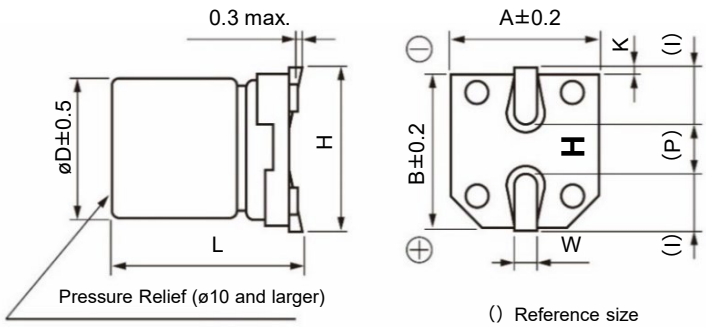

Unit : mm

Size code	øD	L	A, B	H	I	W	P	K
D	6.3	5.8±0.3	6.6	7.8 max.	2.6	0.65±0.1	1.8	$0.35^{+0.15}_{-0.20}$
D8	6.3	7.7±0.3	6.6	7.8 max.	2.6	0.65±0.1	1.8	$0.35^{+0.15}_{-0.20}$
F	8.0	10.2±0.3	8.3	10.0 max.	3.4	0.90±0.2	3.1	0.70±0.2
G	10.0	10.2±0.3	10.3	12.0 max.	3.5	0.90±0.2	4.6	0.70±0.2

Design and specifications are each subject to change without notice. Ask factory for the current technical specifications before purchase and/or use.
Should a safety concern arise regarding this product, please be sure to contact us immediately.

Explanation of part numbers

◇ Part number system

e.g.: EEEFKA331XSL

EEE	FK	A	331	XS	L
Product classification	Series / Code	Rated voltage (V) / Code*	Capacitance (μF) / Code	Special code / Code	Configuration / Code

Series	Code
FK	FK

Rated voltage (V)	Code*
6.3	0J(J)
10	1A(A)
16	1C(C)
25	1E(E)
35	1V(V)
50	1H(H)
63	1J
80	1K(K)
100	2A

Capacitance (μF)	Code	Capacitance (μF)	Code
27	270	330	331
39	390	390	391
47	470	470	471
68	680	560	561
82	820	680	681
100	101	820	821
120	121	1000	102
150	151	1200	122
180	181	1500	152
220	221	1800	182
270	271		

Special code	Code
Miniaturized product	U
D8 size	X
FKS series	S

Configuration	Code
Halogen-free	L

*: The text "0" or "1" is omitted when the part number exceeds 12 figures.
0J →J, 1A→A, 1C→C, 1E→E, 1V→V, 1H→H, 1K→K

Characteristics list

■ 6.3 V to 50 V (High temperature reflow)

Endurance : 105 °C 2000 h

Rated voltage (V)	Capacitance (±20 %) (μF)	Case size (mm) øD	Case size (mm) L	Size code	Specification: Ripple current*1 (mA rms)	Specification: ESR*2 (Ω)	Specification: tanδ*3	Part number	Reflow	Min. Packaging Q'ty (pcs) Taping
6.3	270	6.3	5.8	D	240	0.36	0.26	EEEFK0J271SL	(5)	1000
	470	6.3	7.7	D8	280	0.34	0.26	EEEFKJ471XSL	(5)	900
	1800	10.0	10.2	G	850	0.08	0.26	EEEFK0J182SL	(6)	500
10	220	6.3	5.8	D	240	0.36	0.19	EEEFK1A221SL	(5)	1000
	330	6.3	7.7	D8	280	0.34	0.19	EEEFKA331XSL	(5)	900
	820	8.0	10.2	F	600	0.16	0.19	EEEFK1A821SL	(6)	500
	1200	10.0	10.2	G	850	0.08	0.19	EEEFK1A122SL	(6)	500
	1500	10.0	10.2	G	850	0.08	0.19	EEEFK1A152SL	(6)	500
16	150	6.3	5.8	D	240	0.36	0.16	EEEFK1C151SL	(5)	1000
	270	6.3	7.7	D8	280	0.34	0.16	EEEFKC271XSL	(5)	900
	560	8.0	10.2	F	600	0.16	0.16	EEEFK1C561SL	(6)	500
	680	8.0	10.2	F	600	0.16	0.16	EEEFK1C681SL	(6)	500
	1000	10.0	10.2	G	850	0.08	0.16	EEEFK1C102SL	(6)	500
25	100	6.3	5.8	D	240	0.36	0.14	EEEFK1E101SL	(5)	1000
	150	6.3	7.7	D8	280	0.34	0.14	EEEFKE151XSL	(5)	900
	180	6.3	7.7	D8	280	0.34	0.14	EEEFKE181XSL	(5)	900
	390	8.0	10.2	F	600	0.16	0.14	EEEFK1E391SL	(6)	500
	470	8.0	10.2	F	600	0.16	0.14	EEEFK1E471SL	(6)	500
	680	10.0	10.2	G	850	0.08	0.14	EEEFK1E681SL	(6)	500
	820	10.0	10.2	G	850	0.08	0.14	EEEFK1E821SL	(6)	500
35	68	6.3	5.8	D	240	0.36	0.12	EEEFK1V680SL	(5)	1000
	82	6.3	5.8	D	240	0.36	0.12	EEEFK1V820SL	(5)	1000
	120	6.3	7.7	D8	280	0.34	0.12	EEEFKV121XSL	(5)	900
	270	8.0	10.2	F	600	0.16	0.12	EEEFK1V271SL	(6)	500
	330	8.0	10.2	F	600	0.16	0.12	EEEFK1V331SL	(6)	500
	470	10.0	10.2	G	850	0.08	0.12	EEEFK1V471SL	(6)	500
	560	10.0	10.2	G	850	0.08	0.12	EEEFK1V561SL	(6)	500
50	39	6.3	5.8	D	165	0.88	0.10	EEEFK1H390SL	(5)	1000
	82	6.3	7.7	D8	195	0.68	0.10	EEEFKH820XSL	(5)	900
	180	8.0	10.2	F	350	0.34	0.10	EEEFK1H181SL	(6)	500
	270	10.0	10.2	G	670	0.18	0.10	EEEFK1H271SL	(6)	500

*1: Ripple current (100 kHz / +105 °C)
*2: ESR (100 kHz / +20 °C)
*3: tan δ (120 Hz / +20 °C)
・Please refer to the page of "Reflow Profile" and "The Taping Dimensions".

Design and specifications are each subject to change without notice. Ask factory for the current technical specifications before purchase and/or use.
Should a safety concern arise regarding this product, please be sure to contact us immediately.

Characteristics list

■63 V to 100 V (Standard reflow)

Endurance : 105 °C 2000 h

Rated voltage (V)	Capacitance (±20 %) (μF)	Case size (mm)		Size code	Specification			Part number	Reflow	Min. Packaging Q'ty (pcs)
		øD	L		Ripple current*1 (mA rms)	ESR*2 (Ω)	tanδ*3			Taping
63	120	10.0	10.2	G	400	0.35	0.08	EEEFK1J121SL	(2)	500
80	47	8.0	10.2	F	130	1.30	0.08	EEEFK1K470SL	(2)	500
	82	10.0	10.2	G	200	0.70	0.08	EEEFK1K820SL	(2)	500
100	27	8.0	10.2	F	130	1.30	0.07	EEEFK2A270SL	(2)	500
	47	10.0	10.2	G	200	0.70	0.07	EEEFK2A470SL	(2)	500

*1: Ripple current (100 kHz / +105 °C)
*2: ESR (100 kHz / +20 °C)
*3: tan δ (120 Hz / +20 °C)
・Please refer to the page of "Reflow Profile" and "The Taping Dimensions".

Panasonic
INDUSTRY

Aluminum Electrolytic Capacitors

Surface Mount Type

FN series **6.3 V to 50 V : High temperature Lead-Free reflow**

63 V to 100 V : Standard Lead-Free reflow

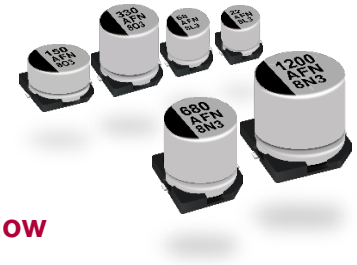

Features

- Endurance : 105 °C 2000 h
- Wide voltage range from 6.3 V to 100 V
- High capacitance : 20 % to 80 % higher than FK series
- Vibration-proof product (30G guaranteed) is available upon request (ø6.3 ≤)
- AEC-Q200 compliant
- RoHS compliant

Specifications

Category temp. range	–55 °C to +105 °C										
Rated voltage range	6.3 V to 100 V										
Capacitance range	10 µF to 1800 µF										
Capacitance tolerance	±20 % (120 Hz / +20°C)										
Leakage current	I ≤ 0.01 CV or 3 (µA), whichever is greater, 2 minutes after reaching rated voltage, 20 °C *CV = (Capacitance in µF) x (Rated voltage in V)										
Dissipation factor (tan δ)	Please see the attached characteristics list										
Characteristics at low temperature	Rated voltage (V)	6.3	10	16	25	35	50	63	80	100	(Impedance ratio at 120 Hz)
	Z (-25 °C) / Z (+20 °C)	2	2	2	2	2	2	2	2	2	
	Z (-40 °C) / Z (+20 °C)	3	3	3	3	3	3	3	3	3	
	Z (-55 °C) / Z (+20 °C)	4	4	4	3	3	3	3	3	3	
Endurance	After applying rated working voltage for 2000 hours at +105 °C ± 2 °C and then being stabilized at +20 °C, capacitors shall meet the following limits.										
	Capacitance change	Within ±30 % of the initial value (For 6.3 V, size B/C, and suffix "U" : Within ±40 %)									
	Dissipation factor (tan δ)	≤ 200 % of the initial limit									
	DC leakege current	Within the initial limit									
Shelf life	After storage for 1000 hours at +105 °C ± 2 °C with no voltage applied and then being stabilized at +20 °C, capacitors shall meet the limits specified in endurance. (Capacitors are left at room temperature and humidity for 2 hours after the test. Then, apply the rated voltage for 30min with a series protection resistance of 1000 Ω ± 10 Ω. Measure electrical characteristics after discharging the capacitor.)										
Resistance to soldering heat	After reflow soldering and then being stabilized at +20 °C, capacitors shall meet the following limits.										
	Capacitance change	Within ±10 % of the initial value									
	Dissipation factor (tan δ)	Within the initial limit									
	DC leakege current	Within the initial limit									

Frequency correction factor for ripple current

Cap. (µF) \ Freq. (Hz)	120	1 k	10 k	100 k to
10 to 470	0.65	0.85	0.95	1.00
560 to 1800	0.70	0.90	0.95	1.00

Marking

Example : 6.3 V 10 µF
Marking color : BLACK

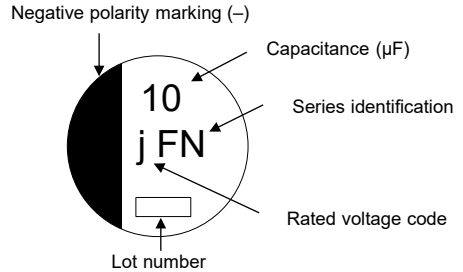

R.voltage code

j	6.3
A	10
C	16
E	25
V	35

Unit : V

H	50
J	63
K	80
2A	100

Dimensions

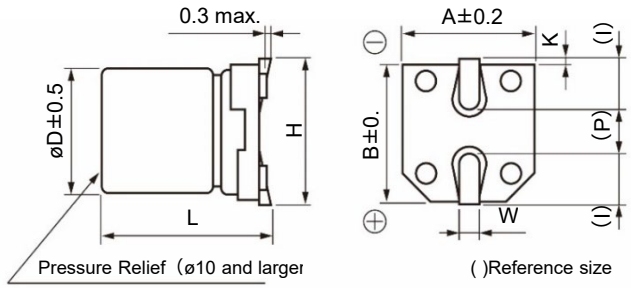

Unit : mm

Size code	øD	L	A, B	H	I	W	P	K
B	4.0	5.8±0.3	4.3	5.5 max.	1.8	0.65±0.1	1.0	$0.35^{+0.15}_{-0.20}$
C	5.0	5.8±0.3	5.3	6.5 max.	2.2	0.65±0.1	1.5	$0.35^{+0.15}_{-0.20}$
D	6.3	5.8±0.3	6.6	7.8 max.	2.6	0.65±0.1	1.8	$0.35^{+0.15}_{-0.20}$
D8	6.3	7.7±0.3	6.6	7.8 max.	2.6	0.65±0.1	1.8	$0.35^{+0.15}_{-0.20}$
F	8.0	10.2±0.3	8.3	10.0 max.	3.4	0.90±0.2	3.1	0.70±0.2
G	10.0	10.2±0.3	10.3	12.0 max.	3.5	0.90±0.2	4.6	0.70±0.2

・The dimensions of the vibration-proof products, please refer to the page of the mounting specification.

Design and specifications are each subject to change without notice. Ask factory for the current technical specifications before purchase and/or use.
Should a safety concern arise regarding this product, please be sure to contact us immediately.

Explanation of part numbers

◇ Part number system

e.g.: EEEFN0J680UR

EEE	FN	0 J	680	U	R
Product classification	Series / Code	Rated voltage (V) / Code*	Capacitance (μF) / Code	Special code / Code	Tape width (mm) / Code

Series	Code
FN	FN

Rated voltage (V)	Code*
6.3	0J(J)
10	1A(A)
16	1C(C)
25	1E(E)
35	1V(V)
50	1H(H)
63	1J
80	1K(K)
100	2A

Capacitance (μF)	Code	Capacitance (μF)	Code
10	100	180	181
18	180	220	221
22	220	270	271
27	270	330	331
33	330	390	391
39	390	470	471
47	470	560	561
56	560	680	681
68	680	820	821
82	820	1000	102
100	101	1200	122
120	121	1500	152
150	151	1800	182

*: The text "0" or "1" is omitted when the part number exceeds 12 figures.
0J →J, 1A→A, 1C→C, 1E→E, 1V→V, 1H→H, 1K→K

Special code	Code
Minia-turized product	U
D8 size	X
Others	–

(Two codes can be combined.)

Tape width (mm)	Code
12	R
16, 24	P

Replace for the following configuration

Configuration	Code
Vibration proof	V

Characteristics list

■ 6.3 V to 50 V (High temperature reflow)

Endurance : 105 °C 2000 h

Rated voltage (V)	Capacitance (±20 %) (μF)	Case size (mm) øD	Case size (mm) L Standard	Case size (mm) L Vibration-proof	Size code	Specification Ripple current*1 (mA rms)	Specification ESR*2 (Ω)	Specification tan δ*3	Part No. Standard product	Part No. Vibration-proof product	Reflow	Min. Packaging Q'ty (pcs) Taping
6.3	10	4.0	5.8	–	B	90	1.35	0.26	EEEFN0J100R	–	(5)	2000
	22	4.0	5.8	–	B	90	1.35	0.26	EEEFN0J220R	–	(5)	2000
	33	4.0	5.8	–	B	90	1.35	0.26	EEEFN0J330R	–	(5)	2000
	47	4.0	5.8	–	B	90	1.35	0.26	EEEFN0J470R	–	(5)	2000
	68	4.0	5.8	–	B	90	1.35	0.26	EEEFN0J680UR	–	(5)	2000
	100	5.0	5.8	–	C	160	0.70	0.26	EEEFN0J101R	–	(5)	1000
	150	5.0	5.8	–	C	160	0.70	0.26	EEEFN0J151UR	–	(5)	1000
	220	6.3	5.8	6.1	D	240	0.36	0.26	EEEFN0J221P	EEEFN0J221V	(5)	1000
	270	6.3	5.8	6.1	D	240	0.36	0.26	EEEFN0J271UP	EEEFN0J271UV	(5)	1000
	330	6.3	7.7	8.0	D8	280	0.34	0.26	EEEFN0J331XP	EEEFN0J331XV	(5)	900
	470	6.3	7.7	8.0	D8	280	0.34	0.26	EEEFNJ471XUP	EEEFNJ471XUV	(5)	900
	680	8.0	10.2	10.5	F	600	0.16	0.26	EEEFN0J681P	EEEFN0J681V	(6)	500
	1000	8.0	10.2	10.5	F	600	0.16	0.26	EEEFN0J102P	EEEFN0J102V	(6)	500
	1500	10.0	10.2	10.5	G	850	0.08	0.26	EEEFN0J152P	EEEFN0J152V	(6)	500
	1800	10.0	10.2	10.5	G	850	0.08	0.26	EEEFN0J182UP	EEEFN0J182UV	(6)	500
10	10	4.0	5.8	–	B	90	1.35	0.19	EEEFN1A100R	–	(5)	2000
	22	4.0	5.8	–	B	90	1.35	0.19	EEEFN1A220R	–	(5)	2000
	33	4.0	5.8	–	B	90	1.35	0.19	EEEFN1A330R	–	(5)	2000
	47	4.0	5.8	–	B	90	1.35	0.19	EEEFN1A470UR	–	(5)	2000
	56	4.0	5.8	–	B	90	1.35	0.19	EEEFN1A560UR	–	(5)	2000
	68	5.0	5.8	–	C	160	0.70	0.19	EEEFN1A680R	–	(5)	1000
	100	5.0	5.8	–	C	160	0.70	0.19	EEEFN1A101UR	–	(5)	1000
	120	5.0	5.8	–	C	160	0.70	0.19	EEEFN1A121UR	–	(5)	1000
	150	6.3	5.8	6.1	D	240	0.36	0.19	EEEFN1A151P	EEEFN1A151V	(5)	1000
	220	6.3	5.8	6.1	D	240	0.36	0.19	EEEFN1A221UP	EEEFN1A221UV	(5)	1000
	330	6.3	7.7	8.0	D8	280	0.34	0.19	EEEFNA331XUP	EEEFNA331XUV	(5)	900
	470	8.0	10.2	10.5	F	600	0.16	0.19	EEEFN1A471P	EEEFN1A471V	(6)	500
	680	8.0	10.2	10.5	F	600	0.16	0.19	EEEFN1A681P	EEEFN1A681V	(6)	500
	820	8.0	10.2	10.5	F	600	0.16	0.19	EEEFN1A821UP	EEEFN1A821UV	(6)	500
	1000	10.0	10.2	10.5	G	850	0.08	0.19	EEEFN1A102P	EEEFN1A102V	(6)	500
	1200	10.0	10.2	10.5	G	850	0.08	0.19	EEEFN1A122UP	EEEFN1A122UV	(6)	500
	1500	10.0	10.2	10.5	G	850	0.08	0.19	EEEFN1A152UP	EEEFN1A152UV	(6)	500

*1: Ripple current (100 kHz / +105 °C)
*2: ESR (100 kHz / +20 °C)
*3: tan δ (120 Hz / +20 °C)
・Please refer to the page of "Reflow Profile" and "The Taping Dimensions".

Design and specifications are each subject to change without notice. Ask factory for the current technical specifications before purchase and/or use.
Should a safety concern arise regarding this product, please be sure to contact us immediately.

Characteristics list

■6.3 V to 50 V (High temperature reflow)

Endurance : 105 °C 2000 h

Rated voltage (V)	Capacitance (±20 %) (μF)	Case size (mm) øD	Case size (mm) L Standard	Case size (mm) L Vibration-proof	Size code	Specification Ripple current*1 (mA rms)	Specification ESR*2 (Ω)	Specification tan δ*3	Part No. Standard product	Part No. Vibration-proof product	Reflow	Min. Packaging Q'ty (pcs) Taping
16	10	4.0	5.8	–	B	90	1.35	0.16	EEEFN1C100R	–	(5)	2000
	22	4.0	5.8	–	B	90	1.35	0.16	EEEFN1C220R	–	(5)	2000
	33	4.0	5.8	–	B	90	1.35	0.16	EEEFN1C330R	–	(5)	2000
	47	4.0	5.8	–	B	90	1.35	0.16	EEEFN1C470UR	–	(5)	2000
	68	5.0	5.8	–	C	160	0.70	0.16	EEEFN1C680R	–	(5)	1000
	100	5.0	5.8	–	C	160	0.70	0.16	EEEFN1C101UR	–	(5)	1000
	150	6.3	5.8	6.1	D	240	0.36	0.16	EEEFN1C151UP	EEEFN1C151UV	(5)	1000
	220	6.3	7.7	8.0	D8	280	0.34	0.16	EEEFN1C221XP	EEEFN1C221XV	(5)	900
	270	6.3	7.7	8.0	D8	280	0.34	0.16	EEEFNC271XUP	EEEFNC271XUV	(5)	900
	330	8.0	10.2	10.5	F	600	0.16	0.16	EEEFN1C331P	EEEFN1C331V	(6)	500
	470	8.0	10.2	10.5	F	600	0.16	0.16	EEEFN1C471P	EEEFN1C471V	(6)	500
	560	8.0	10.2	10.5	F	600	0.16	0.16	EEEFN1C561UP	EEEFN1C561UV	(6)	500
	680	8.0	10.2	10.5	F	600	0.16	0.16	EEEFN1C681UP	EEEFN1C681UV	(6)	500
	1000	10.0	10.2	10.5	G	850	0.08	0.16	EEEFN1C102UP	EEEFN1C102UV	(6)	500
25	10	4.0	5.8	–	B	90	1.35	0.14	EEEFN1E100R	–	(5)	2000
	22	4.0	5.8	–	B	90	1.35	0.14	EEEFN1E220R	–	(5)	2000
	27	4.0	5.8	–	B	90	1.35	0.14	EEEFN1E270UR	–	(5)	2000
	33	5.0	5.8	–	C	160	0.70	0.14	EEEFN1E330R	–	(5)	1000
	47	5.0	5.8	–	C	160	0.70	0.14	EEEFN1E470R	–	(5)	1000
	56	5.0	5.8	–	C	160	0.70	0.14	EEEFN1E560UR	–	(5)	1000
	68	6.3	5.8	6.1	D	240	0.36	0.14	EEEFN1E680P	EEEFN1E680V	(5)	1000
	100	6.3	5.8	6.1	D	240	0.36	0.14	EEEFN1E101UP	EEEFN1E101UV	(5)	1000
	150	6.3	7.7	8.0	D8	280	0.34	0.14	EEEFNE151XUP	EEEFNE151XUV	(5)	900
	180	6.3	7.7	8.0	D8	280	0.34	0.14	EEEFNE181XUP	EEEFNE181XUV	(5)	900
	220	8.0	10.2	10.5	F	600	0.16	0.14	EEEFN1E221P	EEEFN1E221V	(6)	500
	330	8.0	10.2	10.5	F	600	0.16	0.14	EEEFN1E331P	EEEFN1E331V	(6)	500
	390	8.0	10.2	10.5	F	600	0.16	0.14	EEEFN1E391UP	EEEFN1E391UV	(6)	500
	470	8.0	10.2	10.5	F	600	0.16	0.14	EEEFN1E471UP	EEEFN1E471UV	(6)	500
	680	10.0	10.2	10.5	G	850	0.08	0.14	EEEFN1E681UP	EEEFN1E681UV	(6)	500
	820	10.0	10.2	10.5	G	850	0.08	0.14	EEEFN1E821UP	EEEFN1E821UV	(6)	500
35	10	4.0	5.8	–	B	90	1.35	0.12	EEEFN1V100R	–	(5)	2000
	18	4.0	5.8	–	B	90	1.35	0.12	EEEFN1V180UR	–	(5)	2000
	22	5.0	5.8	–	C	160	0.70	0.12	EEEFN1V220R	–	(5)	1000
	33	5.0	5.8	–	C	160	0.70	0.12	EEEFN1V330R	–	(5)	1000
	39	5.0	5.8	–	C	160	0.70	0.12	EEEFN1V390UR	–	(5)	1000
	47	6.3	5.8	6.1	D	240	0.36	0.12	EEEFN1V470P	EEEFN1V470V	(5)	1000
	68	6.3	5.8	6.1	D	240	0.36	0.12	EEEFN1V680UP	EEEFN1V680UV	(5)	1000
	82	6.3	5.8	6.1	D	240	0.36	0.12	EEEFN1V820UP	EEEFN1V820UV	(5)	1000
	100	6.3	7.7	8.0	D8	280	0.34	0.12	EEEFN1V101XP	EEEFN1V101XV	(5)	900
	120	6.3	7.7	8.0	D8	280	0.34	0.12	EEEFNV121XUP	EEEFNV121XUV	(5)	900
	150	8.0	10.2	10.5	F	600	0.16	0.12	EEEFN1V151P	EEEFN1V151V	(6)	500
	220	8.0	10.2	10.5	F	600	0.16	0.12	EEEFN1V221P	EEEFN1V221V	(6)	500
	270	8.0	10.2	10.5	F	600	0.16	0.12	EEEFN1V271UP	EEEFN1V271UV	(6)	500
	330	8.0	10.2	10.5	F	600	0.16	0.12	EEEFN1V331UP	EEEFN1V331UV	(6)	500
	470	10.0	10.2	10.5	G	850	0.08	0.12	EEEFN1V471UP	EEEFN1V471UV	(6)	500
	560	10.0	10.2	10.5	G	850	0.08	0.12	EEEFN1V561UP	EEEFN1V561UV	(6)	500

*1: Ripple current (100 kHz / +105 °C)
*2: ESR (100 kHz / +20 °C)
*3: tan δ (120 Hz / +20 °C)
・Please refer to the page of "Reflow Profile" and "The Taping Dimensions".

Characteristics list

■6.3 V to 50 V (High temperature reflow)

Endurance : 105 °C 2000 h

Rated voltage (V)	Capacitance (±20 %) (μF)	Case size (mm) øD	Case size (mm) L Standard	Case size (mm) L Vibration-proof	Size code	Specification Ripple current*1 (mA rms)	Specification ESR*2 (Ω)	Specification tan δ*3	Part No. Standard product	Part No. Vibration-proof product	Reflow	Min. Packaging Q'ty (pcs) Taping
50	10	4.0	5.8	–	B	60	3.50	0.10	EEEFN1H100UR	–	(5)	2000
	22	5.0	5.8	–	C	85	1.52	0.10	EEEFN1H220UR	–	(5)	1000
	33	6.3	5.8	6.1	D	165	0.88	0.10	EEEFN1H330P	EEEFN1H330V	(5)	1000
	39	6.3	5.8	6.1	D	165	0.88	0.10	EEEFN1H390UP	EEEFN1H390UV	(5)	1000
	47	6.3	7.7	8.0	D8	195	0.68	0.10	EEEFN1H470XP	EEEFN1H470XV	(5)	900
	68	6.3	7.7	8.0	D8	195	0.68	0.10	EEEFN1H680XP	EEEFN1H680XV	(5)	900
	82	6.3	7.7	8.0	D8	195	0.68	0.10	EEEFNH820XUP	EEEFNH820XUV	(5)	900
	100	8.0	10.2	10.5	F	350	0.34	0.10	EEEFN1H101P	EEEFN1H101V	(6)	500
	150	8.0	10.2	10.5	F	350	0.34	0.10	EEEFN1H151UP	EEEFN1H151UV	(6)	500
	180	8.0	10.2	10.5	F	350	0.34	0.10	EEEFN1H181UP	EEEFN1H181UV	(6)	500
	220	10.0	10.2	10.5	G	670	0.18	0.10	EEEFN1H221P	EEEFN1H221V	(6)	500
	270	10.0	10.2	10.5	G	670	0.18	0.10	EEEFN1H271UP	EEEFN1H271UV	(6)	500

■63 V to 100 V (Standard reflow)

Endurance : 105 °C 2000 h

Rated voltage (V)	Capacitance (±20 %) (μF)	Case size (mm) øD	Case size (mm) L Standard	Case size (mm) L Vibration-proof	Size code	Specification Ripple current*1 (mA rms)	Specification ESR*2 (Ω)	Specification tan δ*3	Part No. Standard product	Part No. Vibration-proof product	Reflow	Min. Packaging Q'ty (pcs) Taping
63	10	6.3	5.8	6.1	D	80	1.50	0.08	EEEFN1J100P	EEEFN1J100V	(1)	1000
	22	6.3	7.7	8.0	D8	120	1.20	0.08	EEEFN1J220XP	EEEFN1J220XV	(1)	900
	33	8.0	10.2	10.5	F	250	0.65	0.08	EEEFN1J330P	EEEFN1J330V	(2)	500
	47	8.0	10.2	10.5	F	250	0.65	0.08	EEEFN1J470P	EEEFN1J470V	(2)	500
	68	8.0	10.2	10.5	F	250	0.65	0.08	EEEFN1J680P	EEEFN1J680V	(2)	500
	100	10.0	10.2	10.5	G	400	0.35	0.08	EEEFN1J101P	EEEFN1J101V	(2)	500
	120	10.0	10.2	10.5	G	400	0.35	0.08	EEEFN1J121UP	EEEFN1J121UV	(2)	500
80	10	6.3	7.7	8.0	D8	60	2.40	0.08	EEEFN1K100XP	EEEFN1K100XV	(1)	900
	22	8.0	10.2	10.5	F	130	1.30	0.08	EEEFN1K220P	EEEFN1K220V	(2)	500
	33	8.0	10.2	10.5	F	130	1.30	0.08	EEEFN1K330P	EEEFN1K330V	(2)	500
	47	8.0	10.2	10.5	F	130	1.30	0.08	EEEFN1K470UP	EEEFN1K470UV	(2)	500
	82	10.0	10.2	10.5	G	200	0.70	0.08	EEEFN1K820UP	EEEFN1K820UV	(2)	500
100	10	8.0	10.2	10.5	F	130	1.30	0.07	EEEFN2A100P	EEEFN2A100V	(2)	500
	22	8.0	10.2	10.5	F	130	1.30	0.07	EEEFN2A220P	EEEFN2A220V	(2)	500
	27	8.0	10.2	10.5	F	130	1.30	0.07	EEEFN2A270UP	EEEFN2A270UV	(2)	500
	33	10.0	10.2	10.5	G	200	0.70	0.07	EEEFN2A330P	EEEFN2A330V	(2)	500
	47	10.0	10.2	10.5	G	200	0.70	0.07	EEEFN2A470UP	EEEFN2A470UV	(2)	500

*1: Ripple current (100 kHz / +105 °C)
*2: ESR (100 kHz / +20 °C)
*3: tan δ (120 Hz / +20 °C)
・Please refer to the page of "Reflow Profile" and "The Taping Dimensions".

Panasonic
INDUSTRY

Aluminum Electrolytic Capacitors

Surface Mount Type

Halogen-free FN series

6.3 V to 50 V : High temperature Lead-Free reflow

63 V to 100 V : Standard Lead-Free reflow

Features

- Endurance : 105 °C 2000 h
- Wide voltage range from 6.3 V to 100 V
- High capacitance : 20 % to 80 % higher than FK series
- AEC-Q200 compliant
- RoHS compliant

Country of origin

- Malaysia

Specifications

Category temp. range	–55 °C to +105 °C										
Rated voltage range	6.3 V to 100 V										
Capacitance range	10 µF to 1800 µF										
Capacitance tolerance	±20 % (120 Hz / +20 °C)										
Leakage current	I ≤ 0.01 CV or 3 (µA), whichever is greater, 2 minutes after reaching rated voltage, 20 °C *CV = (Capacitance in µF) x (Rated voltage in V)										
Dissipation factor (tan δ)	Please see the attached characteristics list										
Characteristics at low temperature	Rated voltage (V)	6.3	10	16	25	35	50	63	80	100	(Impedance ratio at 120 Hz)
	Z (–25 °C) / Z (+20 °C)	2	2	2	2	2	2	2	2	2	
	Z (–40 °C) / Z (+20 °C)	3	3	3	3	3	3	3	3	3	
	Z (–55 °C) / Z (+20 °C)	4	4	4	3	3	3	3	3	3	
Endurance	After applying rated working voltage for 2000 hours at +105 °C ± 2 °C and then being stabilized at +20 °C, capacitors shall meet the following limits.										
	Capacitance change	Within ±30 % of the initial value (For suffix "U" : Within ±40 %)									
	Dissipation factor (tan δ)	≤ 200 % of the initial limit									
	Leakage current	Within the initial limit									
Shelf life	After storage for 1000 hours at +105 °C ± 2 °C with no voltage applied and then being stabilized at +20 °C, capacitors shall meet the limits specified in endurance. (Capacitors are left at room temperature and humidity for 2 hours after the test. Then, apply the rated voltage for 30min with a series protection resistance of 1000 Ω ± 10 Ω. Measure electrical characteristics after discharging the capacitor.)										
Resistance to soldering heat	After reflow soldering and then being stabilized at +20 °C, capacitors shall meet the following limits.										
	Capacitance change	Within ±10 % of the initial value									
	Dissipation factor (tan δ)	Within the initial limit									
	Leakage current	Within the initial limit									

Frequency correction factor for ripple current

Cap. (µF) \ Freq. (Hz)	120	1 k	10 k	100 k to
10 to 470	0.65	0.85	0.95	1.00
560 to 1800	0.70	0.90	0.95	1.00

Marking

Example : 6.3 V 220 µF
Marking color : BLACK

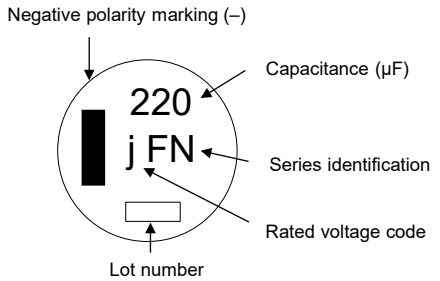

R.voltage code — Unit : V

j	6.3
A	10
C	16
E	25
V	35
H	50
J	63
K	80
2A	100

Dimensions

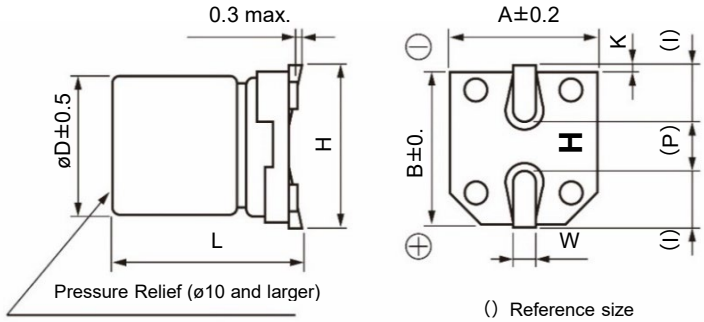

Unit : mm

Size code	øD	L	A, B	H	I	W	P	K
D	6.3	5.8±0.3	6.6	7.8 max.	2.6	0.65±0.1	1.8	$0.35^{+0.15}_{-0.20}$
D8	6.3	7.7±0.3	6.6	7.8 max.	2.6	0.65±0.1	1.8	$0.35^{+0.15}_{-0.20}$
F	8.0	10.2±0.3	8.3	10.0 max.	3.4	0.90±0.2	3.1	0.70±0.2
G	10.0	10.2±0.3	10.3	12.0 max.	3.5	0.90±0.2	4.6	0.70±0.2

Design and specifications are each subject to change without notice. Ask factory for the current technical specifications before purchase and/or use.
Should a safety concern arise regarding this product, please be sure to contact us immediately.

Explanation of part numbers

◇ Part number system

e.g.: EEEFN0J271UL

EEE	FN	0J	271	U	L
Product classification	Series / Code	Rated voltage (V) / Code*	Capacitance (μF) / Code	Special code / Code	Configuration / Code

Series	Code
FN	FN

Rated voltage (V)	Code*
6.3	0J(J)
10	1A(A)
16	1C(C)
25	1E(E)
35	1V(V)
50	1H(H)
63	1J
80	1K(K)
100	2A

Capacitance (μF)	Code	Capacitance (μF)	Code
10	100	220	221
22	220	270	271
27	270	330	331
33	330	390	391
39	390	470	471
47	470	560	561
68	680	680	681
82	820	820	821
100	101	1000	102
120	121	1200	122
150	151	1500	152
180	181	1800	182

Special code	Code
Miniaturized product	U
D8 size	X
Others	–

Configuration	Code
Halogen-free	L

*: The text "0" or "1" is omitted when the part number exceeds 12 figures.
0J →J, 1A→A, 1C→C, 1E→E, 1V→V, 1H→H, 1K→K

Characteristics list

■ 6.3 V to 50 V (High temperature reflow)

Endurance : 105 °C 2000 h

Rated voltage (V)	Capacitance (±20 %) (μF)	Case size (mm) øD	Case size (mm) L	Size code	Specification: Ripple current*1 (mA rms)	Specification: ESR*2 (Ω)	Specification: tanδ*3	Part number	Reflow	Min. Packaging Q'ty (pcs) Taping
6.3	220	6.3	5.8	D	240	0.36	0.26	EEEFN0J221L	(5)	1000
	270	6.3	5.8	D	240	0.36	0.26	EEEFN0J271UL	(5)	1000
	330	6.3	7.7	D8	280	0.34	0.26	EEEFN0J331XL	(5)	900
	470	6.3	7.7	D8	280	0.34	0.26	EEEFNJ471XUL	(5)	900
	680	8.0	10.2	F	600	0.16	0.26	EEEFN0J681L	(6)	500
	1000	8.0	10.2	F	600	0.16	0.26	EEEFN0J102L	(6)	500
	1500	10.0	10.2	G	850	0.08	0.26	EEEFN0J152L	(6)	500
	1800	10.0	10.2	G	850	0.08	0.26	EEEFN0J182UL	(6)	500
10	150	6.3	5.8	D	240	0.36	0.19	EEEFN1A151L	(5)	1000
	220	6.3	5.8	D	240	0.36	0.19	EEEFN1A221UL	(5)	1000
	330	6.3	7.7	D8	280	0.34	0.19	EEEFNA331XUL	(5)	900
	470	8.0	10.2	F	600	0.16	0.19	EEEFN1A471L	(6)	500
	680	8.0	10.2	F	600	0.16	0.19	EEEFN1A681L	(6)	500
	820	8.0	10.2	F	600	0.16	0.19	EEEFN1A821UL	(6)	500
	1000	10.0	10.2	G	850	0.08	0.19	EEEFN1A102L	(6)	500
	1200	10.0	10.2	G	850	0.08	0.19	EEEFN1A122UL	(6)	500
	1500	10.0	10.2	G	850	0.08	0.19	EEEFN1A152UL	(6)	500
16	150	6.3	5.8	D	240	0.36	0.16	EEEFN1C151UL	(5)	1000
	220	6.3	7.7	D8	280	0.34	0.16	EEEFN1C221XL	(5)	900
	270	6.3	7.7	D8	280	0.34	0.16	EEEFNC271XUL	(5)	900
	330	8.0	10.2	F	600	0.16	0.16	EEEFN1C331L	(6)	500
	470	8.0	10.2	F	600	0.16	0.16	EEEFN1C471L	(6)	500
	560	8.0	10.2	F	600	0.16	0.16	EEEFN1C561UL	(6)	500
	680	8.0	10.2	F	600	0.16	0.16	EEEFN1C681UL	(6)	500
	1000	10.0	10.2	G	850	0.08	0.16	EEEFN1C102UL	(6)	500

*1: Ripple current (100 kHz / +105 °C)
*2: ESR (100 kHz / +20 °C)
*3: tan δ (120 Hz / +20 °C)
・Please refer to the page of "Reflow Profile" and "The Taping Dimensions".

Characteristics list

■ 6.3 V to 50 V (High temperature reflow)

Endurance : 105 °C 2000 h

Rated voltage (V)	Capacitance (±20 %) (μF)	Case size (mm)		Size code	Specification			Part number	Reflow	Min. Packaging Q'ty (pcs)
		øD	L		Ripple current*1 (mA rms)	ESR*2 (Ω)	tanδ*3			Taping
25	68	6.3	5.8	D	240	0.36	0.14	EEEFN1E680L	(5)	1000
	100	6.3	5.8	D	240	0.36	0.14	EEEFN1E101UL	(5)	1000
	150	6.3	7.7	D8	280	0.34	0.14	EEEFNE151XUL	(5)	900
	180	6.3	7.7	D8	280	0.34	0.14	EEEFNE181XUL	(5)	900
	220	8.0	10.2	F	600	0.16	0.14	EEEFN1E221L	(6)	500
	330	8.0	10.2	F	600	0.16	0.14	EEEFN1E331L	(6)	500
	390	8.0	10.2	F	600	0.16	0.14	EEEFN1E391UL	(6)	500
	470	8.0	10.2	F	600	0.16	0.14	EEEFN1E471UL	(6)	500
	680	10.0	10.2	G	850	0.08	0.14	EEEFN1E681UL	(6)	500
	820	10.0	10.2	G	850	0.08	0.14	EEEFN1E821UL	(6)	500
35	47	6.3	5.8	D	240	0.36	0.12	EEEFN1V470L	(5)	1000
	68	6.3	5.8	D	240	0.36	0.12	EEEFN1V680UL	(5)	1000
	82	6.3	5.8	D	240	0.36	0.12	EEEFN1V820UL	(5)	1000
	100	6.3	7.7	D8	280	0.34	0.12	EEEFN1V101XL	(5)	900
	120	6.3	7.7	D8	280	0.34	0.12	EEEFNV121XUL	(5)	900
	150	8.0	10.2	F	600	0.16	0.12	EEEFN1V151L	(6)	500
	220	8.0	10.2	F	600	0.16	0.12	EEEFN1V221L	(6)	500
	270	8.0	10.2	F	600	0.16	0.12	EEEFN1V271UL	(6)	500
	330	8.0	10.2	F	600	0.16	0.12	EEEFN1V331UL	(6)	500
	470	10.0	10.2	G	850	0.08	0.12	EEEFN1V471UL	(6)	500
	560	10.0	10.2	G	850	0.08	0.12	EEEFN1V561UL	(6)	500
50	33	6.3	5.8	D	165	0.88	0.10	EEEFN1H330L	(5)	1000
	39	6.3	5.8	D	165	0.88	0.10	EEEFN1H390UL	(5)	1000
	47	6.3	7.7	D8	195	0.68	0.10	EEEFN1H470XL	(5)	900
	68	6.3	7.7	D8	195	0.68	0.10	EEEFN1H680XL	(5)	900
	82	6.3	7.7	D8	195	0.68	0.10	EEEFNH820XUL	(5)	900
	100	8.0	10.2	F	350	0.34	0.10	EEEFN1H101L	(6)	500
	150	8.0	10.2	F	350	0.34	0.10	EEEFN1H151UL	(6)	500
	180	8.0	10.2	F	350	0.34	0.10	EEEFN1H181UL	(6)	500
	220	10.0	10.2	G	670	0.18	0.10	EEEFN1H221L	(6)	500
	270	10.0	10.2	G	670	0.18	0.10	EEEFN1H271UL	(6)	500

■ 63 V to 100 V (Standard reflow)

Endurance : 105 °C 2000 h

Rated voltage (V)	Capacitance (±20 %) (μF)	Case size (mm)		Size code	Specification			Part number	Reflow	Min. Packaging Q'ty (pcs)
		øD	L		Ripple current*1 (mA rms)	ESR*2 (Ω)	tanδ*3			Taping
63	10	6.3	5.8	D	80	1.50	0.08	EEEFN1J100L	(1)	1000
	22	6.3	7.7	D8	120	1.20	0.08	EEEFN1J220XL	(1)	900
	33	8.0	10.2	F	250	0.65	0.08	EEEFN1J330L	(2)	500
	47	8.0	10.2	F	250	0.65	0.08	EEEFN1J470L	(2)	500
	68	8.0	10.2	F	250	0.65	0.08	EEEFN1J680L	(2)	500
	100	10.0	10.2	G	400	0.35	0.08	EEEFN1J101L	(2)	500
	120	10.0	10.2	G	400	0.35	0.08	EEEFN1J121UL	(2)	500
80	10	6.3	7.7	D8	60	2.40	0.08	EEEFN1K100XL	(1)	900
	22	8.0	10.2	F	130	1.30	0.08	EEEFN1K220L	(2)	500
	33	8.0	10.2	F	130	1.30	0.08	EEEFN1K330L	(2)	500
	47	8.0	10.2	F	130	1.30	0.08	EEEFN1K470UL	(2)	500
	82	10.0	10.2	G	200	0.70	0.08	EEEFN1K820UL	(2)	500
100	10	8.0	10.2	F	130	1.30	0.07	EEEFN2A100L	(2)	500
	22	8.0	10.2	F	130	1.30	0.07	EEEFN2A220L	(2)	500
	27	8.0	10.2	F	130	1.30	0.07	EEEFN2A270UL	(2)	500
	33	10.0	10.2	G	200	0.70	0.07	EEEFN2A330L	(2)	500
	47	10.0	10.2	G	200	0.70	0.07	EEEFN2A470UL	(2)	500

*1: Ripple current (100 kHz / +105 °C)　*2: ESR (100 kHz / +20 °C)　*3: tan δ (120 Hz / +20 °C)

・Please refer to the page of "Reflow Profile" and "The Taping Dimensions".

Design and specifications are each subject to change without notice. Ask factory for the current technical specifications before purchase and/or use.
Should a safety concern arise regarding this product, please be sure to contact us immediately.

Panasonic
INDUSTRY

Aluminum Electrolytic Capacitors

Surface Mount Type

FT series

High temperature Lead-Free reflow

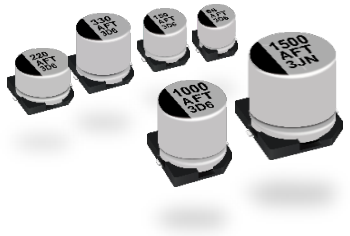

Features

- Endurance : 105 °C 2000 h to 5000 h
- Miniaturized, Low ESR (1 size smaller than series FK)
- Vibration-proof product (30G guaranteed) is available upon request (ø6.3 ≤)
- AEC-Q200 compliant
- RoHS compliant

Specifications

Category temp. range	–55 °C to +105 °C	
Rated voltage range	6.3 V to 50 V	
Capacitance range	10 µF to 2200 µF	
Capacitance tolerance	±20 % (120 Hz / +20 °C)	
Leakage current	I ≤ 0.01 CV（µA）After 2 minutes	
Dissipation factor (tan δ)	Please see the attached characteristics list	
Endurance	After applying rated working voltage for 2000 hours at +105 °C ± 2 °C and then being stabilized at +20 °C, capacitors shall meet the following limits. (Suffix "G" in 6.3 V : 3000 hours, 10 V to 50 V : 5000 hours)	
	Capacitance change	Within ±30 % of the initial value (Suffix "G" is ≤ ±35 %)
	Dissipation factor (tan δ)	≤ 200 % of the initial limit (Suffix "G" is ≤ 300 %)
	Leakage current	Within the initial limit
Shelf life	After storage for 1000 hours at +105 °C ± 2 °C with no voltage applied and then being stabilized at +20 °C, capacitors shall meet the following limits. (Capacitors are left at room temperature and humidity for 2 hours after the test. Then, apply the rated voltage for 30min with a series protection resistance of 1000 Ω ± 10 Ω. Measure electrical characteristics after discharging the capacitor.)	
	Capacitance change	Within ±30 % of the initial value
	Dissipation factor (tan δ)	≤ 200 % of the initial limit
	Leakage current	Within the initial limit
Resistance to soldering heat	After reflow soldering and then being stabilized at +20 °C, capacitors shall meet the following limits.	
	Capacitance change	Within ±10 % of the initial value
	Dissipation factor (tan δ)	Within the initial limit
	Leakage current	Within the initial limit

Frequency correction factor for ripple current

Cap. (µF) \ Freq. (Hz)	120	1 k	10 k	100 k to
10 to 470	0.65	0.85	0.95	1.00
560 to 2200	0.70	0.90	0.95	1.00

Marking

Example : 25 V 22 µF
Marking color : BLACK

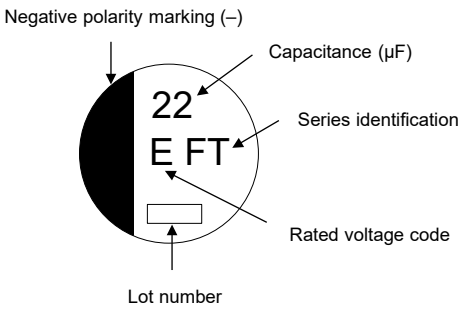

R.voltage code

j	6.3	E	25
A	10	V	35
C	16	H	50

Unit : V

Dimensions

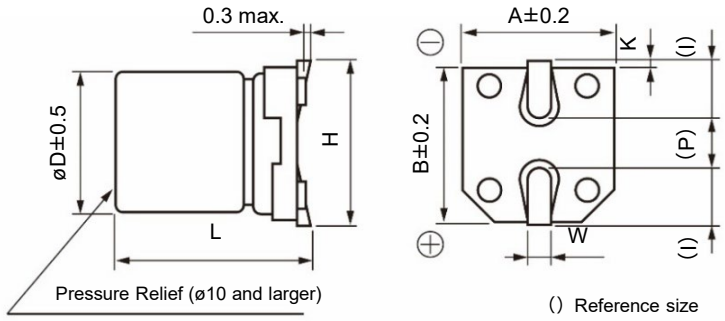

Unit : mm

Size code	øD	L	A、B	H	I	W	P	K
B	4.0	5.8±0.3	4.3	5.5 max.	1.8	0.65±0.1	1.0	$0.35^{+0.15}_{-0.20}$
C	5.0	5.8±0.3	5.3	6.5 max.	2.2	0.65±0.1	1.5	$0.35^{+0.15}_{-0.20}$
D	6.3	5.8±0.3	6.6	7.8 max.	2.6	0.65±0.1	1.8	$0.35^{+0.15}_{-0.20}$
D8	6.3	7.7±0.3	6.6	7.8 max.	2.6	0.65±0.1	1.8	$0.35^{+0.15}_{-0.20}$
F	8.0	10.2±0.3	8.3	10.0 max.	3.4	0.90±0.2	3.1	0.70±0.2
G	10.0	10.2±0.3	10.3	12.0 max.	3.5	0.90±0.2	4.6	0.70±0.2

・The dimensions of the vibration-proof products, please refer to the page of the mounting specification.

Design and specifications are each subject to change without notice. Ask factory for the current technical specifications before purchase and/or use.
Should a safety concern arise regarding this product, please be sure to contact us immediately.

Explanation of part numbers

◇ Part number system

e.g.: EEEFTJ471XAP

EEE — Product classification

FT

Series	Code
FT	FT

J

Rated voltage (V)	Code*
6.3	0J(J)
10	1A(A)
16	1C(C)
25	1E(E)
35	1V(V)
50	1H(H)

471

Capacitance (μF)	Code	Capacitance (μF)	Code
10	100	390	391
22	220	470	471
33	330	560	561
47	470	680	681
68	680	820	821
100	101	1000	102
150	151	1200	122
220	221	1500	152
330	331	2200	222

XA

Special code	Code
High-temperature lead-free reflow	A
Minia-turized product	U
D8 size	X
5000 h	G

(Two codes can be combined)

P

Tape width (mm)	Code
12	R
16, 24	P

Replace for the following configuration

Configuration	Code
Vibration proof	V

*: The text "0" or "1" is omitted when the part number exceeds 12 figures.
0J →J, 1A→A, 1C→C, 1E→E, 1V→V, 1H→H

Characteristics list

Endurance : 105 °C 2000 h

Rated voltage (V)	Capacitance (±20 %) (μF)	Case size (mm) φD	Case size (mm) L Standard	Case size (mm) L Vibration-proof	Size code*1	Specification Ripple current*2 (mA rms)	Specification ESR*3 (Ω)	Specification tan δ*4	Part No. Standard Product	Part No. Vibration-proof product	Reflow	Min. Packaging Q'ty (pcs) Taping
6.3	100	4.0	5.8	–	B	160	0.85	0.26	EEEFT0J101AR	–	(5)	2000
	220	5.0	5.8	–	C	240	0.36	0.26	EEEFT0J221AR	—	(5)	1000
	330	6.3	5.8	6.1	D	300	0.26	0.26	EEEFT0J331AP	EEEFT0J331AV	(5)	1000
	470	6.3	7.7	8.0	D8	600	0.16	0.26	EEEFTJ471XAP	EEEFTJ471XAV	(5)	900
	680	6.3	7.7	8.0	D8	600	0.16	0.26	EEEFTJ681XAP	EEEFTJ681XAV	(5)	900
	1500	8.0	10.2	10.5	F	850	0.08	0.26	EEEFT0J152AP	EEEFT0J152AV	(6)	500
	2200	10.0	10.2	10.5	G	1190	0.06	0.28	EEEFT0J222AP	EEEFT0J222AV	(6)	500
10	68	4.0	5.8	–	B	160	0.85	0.19	EEEFT1A680AR	–	(5)	2000
	150	5.0	5.8	–	C	240	0.36	0.19	EEEFT1A151AR	–	(5)	1000
	220	6.3	5.8	6.1	D	300	0.26	0.19	EEEFT1A221AP	EEEFT1A221AV	(5)	1000
	330	6.3	7.7	8.0	D8	600	0.16	0.19	EEEFTA331XAP	EEEFTA331XAV	(5)	900
	470	6.3	7.7	8.0	D8	600	0.16	0.19	EEEFTA471XAP	EEEFTA471XAV	(5)	900
	1000	8.0	10.2	10.5	F	850	0.08	0.19	EEEFT1A102AP	EEEFT1A102AV	(6)	500
	1500	10.0	10.2	10.5	G	1190	0.06	0.19	EEEFT1A152AP	EEEFT1A152AV	(6)	500
16	47	4.0	5.8	–	B	160	0.85	0.16	EEEFT1C470AR	–	(5)	2000
	68	5.0	5.8	–	C	240	0.36	0.16	EEEFT1C680AR	–	(5)	1000
	100	5.0	5.8	–	C	240	0.36	0.16	EEEFT1C101AR	–	(5)	1000
	150	6.3	5.8	6.1	D	300	0.26	0.16	EEEFT1C151AP	EEEFT1C151AV	(5)	1000
	220	6.3	5.8	6.1	D	300	0.26	0.16	EEEFT1C221AP	EEEFT1C221AV	(5)	1000
	330	6.3	7.7	8.0	D8	600	0.16	0.16	EEEFTC331XAP	EEEFTC331XAV	(5)	900
	680	8.0	10.2	10.5	F	850	0.08	0.16	EEEFT1C681AP	EEEFT1C681AV	(6)	500
	820	8.0	10.2	10.5	F	850	0.08	0.16	EEEFT1C821UP	EEEFT1C821UV	(6)	500
	1000	10.0	10.2	10.5	G	1190	0.06	0.16	EEEFT1C102AP	EEEFT1C102AV	(6)	500
	1200	10.0	10.2	10.5	G	1190	0.06	0.16	EEEFT1C122UP	EEEFT1C122UV	(6)	500

*1: Size code( ): Miniaturization product
*2: Ripple current (100 kHz / +105 °C)
*3: ESR (100 kHz / +20 °C)
*4: tan δ (120 Hz / +20 °C)
・Please refer to the page of "Reflow Profile" and "The Taping Dimensions".

Design and specifications are each subject to change without notice. Ask factory for the current technical specifications before purchase and/or use.
Should a safety concern arise regarding this product, please be sure to contact us immediately.

Characteristics list

Endurance : 105 ℃ 2000 h

Rated voltage (V)	Capacitance (±20 %) (μF)	Case size (mm) φD	Case size (mm) L Standard	Case size (mm) L Vibration-proof	Size code*1	Specification Ripple current*2 (mA rms)	Specification ESR*3 (Ω)	Specification tan δ*4	Part No. Standard Product	Part No. Vibration-proof product	Reflow	Min. Packaging Q'ty (pcs) Taping
25	22	4.0	5.8	–	B	160	0.85	0.14	EEEFT1E220AR	–	(5)	2000
	33	4.0	5.8	–	B	160	0.85	0.14	EEEFT1E330AR	–	(5)	2000
	47	5.0	5.8	–	C	240	0.36	0.14	EEEFT1E470AR	–	(5)	1000
	68	5.0	5.8	–	C	240	0.36	0.14	EEEFT1E680AR	–	(5)	1000
	100	6.3	5.8	6.1	D	300	0.26	0.14	EEEFT1E101AP	EEEFT1E101AV	(5)	1000
	150	6.3	7.7	8.0	D8	600	0.16	0.14	EEEFTE151XAP	EEEFTE151XAV	(5)	900
	220	6.3	7.7	8.0	D8	600	0.16	0.14	EEEFTE221XAP	EEEFTE221XAV	(5)	900
	470	8.0	10.2	10.5	F	850	0.08	0.14	EEEFT1E471AP	EEEFT1E471AV	(6)	500
	560	8.0	10.2	10.5	F	850	0.08	0.14	EEEFT1E561UP	EEEFT1E561UV	(6)	500
	820	10.0	10.2	10.5	G	1190	0.06	0.14	EEEFT1E821AP	EEEFT1E821AV	(6)	500
	1000	10.0	10.2	10.5	G	1190	0.06	0.14	EEEFT1E102UP	EEEFT1E102UV	(6)	500
35	22	4.0	5.8	–	B	160	0.85	0.12	EEEFT1V220AR	–	(5)	2000
	33	5.0	5.8	–	C	240	0.36	0.12	EEEFT1V330AR	–	(5)	1000
	47	5.0	5.8	–	C	240	0.36	0.12	EEEFT1V470AR	–	(5)	1000
	68	6.3	5.8	6.1	D	300	0.26	0.12	EEEFT1V680AP	EEEFT1V680AV	(5)	1000
	100	6.3	5.8	6.1	D	300	0.26	0.12	EEEFT1V101AP	EEEFT1V101AV	(5)	1000
	150	6.3	7.7	8.0	D8	600	0.16	0.12	EEEFTV151XAP	EEEFTV151XAV	(5)	900
	330	8.0	10.2	10.5	F	850	0.08	0.12	EEEFT1V331AP	EEEFT1V331AV	(6)	500
	390	8.0	10.2	10.5	F	850	0.08	0.12	EEEFT1V391UP	EEEFT1V391UV	(6)	500
	560	10.0	10.2	10.5	G	1190	0.06	0.12	EEEFT1V561AP	EEEFT1V561AV	(6)	500
	680	10.0	10.2	10.5	G	1190	0.06	0.12	EEEFT1V681UP	EEEFT1V681UV	(6)	500
50	10	4.0	5.8	–	(B)	85	2.30	0.10	EEEFTH100UAR	–	(5)	2000
		5.0	5.8	–	C	165	0.88	0.10	EEEFT1H100AR	–	(5)	1000
	22	5.0	5.8	–	C	165	0.88	0.10	EEEFT1H220AR	–	(5)	1000
	47	6.3	5.8	6.1	D	195	0.68	0.10	EEEFT1H470AP	EEEFT1H470AV	(5)	1000
	100	6.3	7.7	8.0	D8	350	0.34	0.10	EEEFTH101XAP	EEEFTH101XAV	(5)	900
	220	8.0	10.2	10.5	F	670	0.18	0.10	EEEFT1H221AP	EEEFT1H221AV	(6)	500
	330	10.0	10.2	10.5	G	900	0.12	0.10	EEEFT1H331AP	EEEFT1H331AV	(6)	500

Endurance : 105 °C 5000 h (6.3 V.DC : 105 °C 3000 h)

Rated voltage (V)	Capacitance (±20 %) (μF)	Case size (mm) φD	Case size (mm) L Standard	Case size (mm) L Vibration-proof	Size code	Specification Ripple current*1 (mA rms)	Specification ESR*2 (Ω)	Specification tan δ*3	Part No. Standard Product	Part No. Vibration-proof product	Reflow	Min. Packaging Q'ty (pcs) Taping
6.3	1500	8.0	10.2	10.5	F	850	0.08	0.26	EEEFT0J152GP	EEEFT0J152GV	(6)	500
	2200	10.0	10.2	10.5	G	1190	0.06	0.28	EEEFT0J222GP	EEEFT0J222GV	(6)	500
10	1000	8.0	10.2	10.5	F	850	0.08	0.19	EEEFT1A102GP	EEEFT1A102GV	(6)	500
	1500	10.0	10.2	10.5	G	1190	0.06	0.19	EEEFT1A152GP	EEEFT1A152GV	(6)	500
16	680	8.0	10.2	10.5	F	850	0.08	0.16	EEEFT1C681GP	EEEFT1C681GV	(6)	500
	1000	10.0	10.2	10.5	G	1190	0.06	0.16	EEEFT1C102GP	EEEFT1C102GV	(6)	500
25	470	8.0	10.2	10.5	F	850	0.08	0.14	EEEFT1E471GP	EEEFT1E471GV	(6)	500
	820	10.0	10.2	10.5	G	1190	0.06	0.14	EEEFT1E821GP	EEEFT1E821GV	(6)	500
35	330	8.0	10.2	10.5	F	850	0.08	0.12	EEEFT1V331GP	EEEFT1V331GV	(6)	500
	560	10.0	10.2	10.5	G	1190	0.06	0.12	EEEFT1V561GP	EEEFT1V561GV	(6)	500
50	220	8.0	10.2	10.5	F	670	0.18	0.10	EEEFT1H221GP	EEEFT1H221GV	(6)	500
	330	10.0	10.2	10.5	G	900	0.12	0.10	EEEFT1H331GP	EEEFT1H331GV	(6)	500

*1: Size code( ): Miniaturization product
*2: Ripple current (100 kHz / +105 °C)
*3: ESR (100 kHz / +20 °C)
*4: tan δ (120 Hz / +20 °C)
・Please refer to the page of "Reflow Profile" and "The Taping Dimensions".

Panasonic
INDUSTRY

Aluminum Electrolytic Capacitors

Surface Mount Type

Halogen-free FT series

High temperature Lead-Free reflow

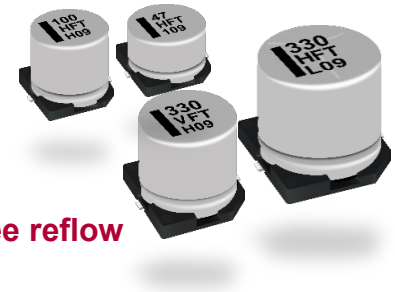

Features

- Endurance : 105 °C 2000 h
- Miniaturized, Low ESR (1 size smaller than series FK)
- AEC-Q200 compliant
- RoHS compliant

Country of origin

- Malaysia

Specifications

Category temp. range	–55 °C to +105 °C							
Rated voltage range	6.3 V to 50 V							
Capacitance range	47 µF to 2200 µF							
Capacitance tolerance	±20 % (120 Hz / +20 °C)							
Leakage current	I ≤ 0.01 CV（µA）After 2 minutes							
Dissipation factor (tan δ)	Please see the attached characteristics list							
Characteristics at low temperature	Rated voltage (V)	6.3	10	16	25	35	50	(Impedance ratio at 120 Hz)
	Z (–25 °C) / Z (+20 °C)	2	2	2	2	2	2	
	Z (–40 °C) / Z (+20 °C)	3	3	3	3	3	3	
	Z (–55 °C) / Z (+20 °C)	4	4	4	3	3	3	
Endurance	After applying rated working voltage for 2000 hours at +105 °C ± 2 °C and then being stabilized at +20 °C, capacitors shall meet the following limits.							
	Capacitance change	Within ±30 % of the initial value						
	Dissipation factor（tan δ）	≤ 200 % of the initial limit						
	Leakage current	Within the initial limit						
Shelf life	After storage for 1000 hours at +105 °C ± 2 °C with no voltage applied and then being stabilized at +20 °C, capacitors shall meet the limits specified in endurance. (Capacitors are left at room temperature and humidity for 2 hours after the test. Then, apply the rated voltage for 30min with a series protection resistance of 1000 Ω ± 10 Ω. Measure electrical characteristics after discharging the capacitor.)							
Resistance to soldering heat	After reflow soldering and then being stabilized at +20 °C, capacitors shall meet the following limits.							
	Capacitance change	Within ±10 % of the initial value						
	Dissipation factor（tan δ）	Within the initial limit						
	Leakage current	Within the initial limit						

Frequency correction factor for ripple current

Cap. (µF) \ Freq. (Hz)	120	1 k	10 k	100 k to
47 to 470	0.65	0.85	0.95	1.00
560 to 2200	0.70	0.90	0.95	1.00

Marking

Example : 6.3 V 330 µF
Marking color : BLACK

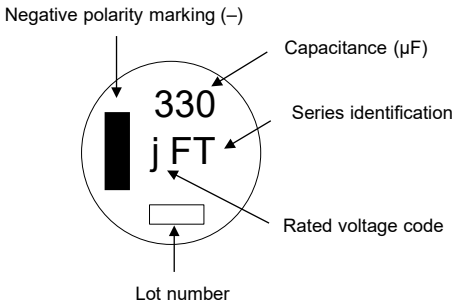

R.voltage code

j	6.3	E	25
A	10	V	35
C	16	H	50

Unit : V

Dimensions

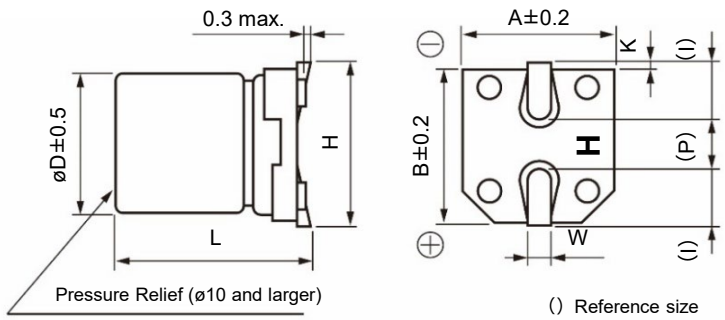

Unit : mm

Size code	øD	L	A, B	H	I	W	P	K
D	6.3	5.8±0.3	6.6	7.8 max.	2.6	0.65±0.1	1.8	$0.35^{+0.15}_{-0.20}$
D8	6.3	7.7±0.3	6.6	7.8 max.	2.6	0.65±0.1	1.8	$0.35^{+0.15}_{-0.20}$
F	8.0	10.2±0.3	8.3	10.0 max.	3.4	0.90±0.2	3.1	0.70±0.2
G	10.0	10.2±0.3	10.3	12.0 max.	3.5	0.90±0.2	4.6	0.70±0.2

Design and specifications are each subject to change without notice. Ask factory for the current technical specifications before purchase and/or use.
Should a safety concern arise regarding this product, please be sure to contact us immediately.

Explanation of part numbers

◇ Part number system

e.g.: EEEFT0J331AL

EEE	FT	0J	331	A	L
Product classification	Series / Code	Rated voltage (V) / Code*	Capacitance (μF) / Code	Special code / Code	Configuration / Code

Series	Code
FT	FT

Rated voltage (V)	Code*
6.3	0J(J)
10	1A(A)
16	1C(C)
25	1E(E)
35	1V(V)
50	1H(H)

Capacitance (μF)	Code	Capacitance (μF)	Code
47	470	560	561
68	680	680	681
100	101	820	821
150	151	1000	102
220	221	1200	122
330	331	1500	152
390	391	2200	222
470	471		

Special code	Code
High-temperature lead-free reflow	A
Minia-turized product	U
D8 size	X

(Two codes can be combined)

Configuration	Code
Halogen -free	L

*: The text "0" or "1" is omitted when the part number exceeds 12 figures.
0J →J, 1A→A, 1C→C, 1E→E, 1V→V, 1H→H

Characteristics list

Endurance : 105 °C 2000 h

Rated voltage (V)	Capacitance (±20 %) (μF)	Case size (mm) øD	Case size (mm) L	Size code	Specification: Ripple current*1 (mA rms)	Specification: ESR*2 (Ω)	Specification: tanδ*3	Part number	Reflow	Min. Packaging Q'ty (pcs) Taping
6.3	330	6.3	5.8	D	300	0.26	0.26	EEEFT0J331AL	(5)	1000
	470	6.3	7.7	D8	600	0.16	0.26	EEEFTJ471XAL	(5)	900
	680	6.3	7.7	D8	600	0.16	0.26	EEEFTJ681XAL	(5)	900
	1500	8.0	10.2	F	850	0.08	0.26	EEEFT0J152AL	(6)	500
	2200	10.0	10.2	G	1190	0.06	0.28	EEEFT0J222AL	(6)	500
10	220	6.3	5.8	D	300	0.26	0.19	EEEFT1A221AL	(5)	1000
	330	6.3	7.7	D8	600	0.16	0.19	EEEFTA331XAL	(5)	900
	470	6.3	7.7	D8	600	0.16	0.19	EEEFTA471XAL	(5)	900
	1000	8.0	10.2	F	850	0.08	0.19	EEEFT1A102AL	(6)	500
	1500	10.0	10.2	G	1190	0.06	0.19	EEEFT1A152AL	(6)	500
16	150	6.3	5.8	D	300	0.26	0.16	EEEFT1C151AL	(5)	1000
	220	6.3	5.8	D	300	0.26	0.16	EEEFT1C221AL	(5)	1000
	330	6.3	7.7	D8	600	0.16	0.16	EEEFTC331XAL	(5)	900
	680	8.0	10.2	F	850	0.08	0.16	EEEFT1C681AL	(6)	500
	820	8.0	10.2	F	850	0.08	0.16	EEEFT1C821UL	(6)	500
	1000	10.0	10.2	G	1190	0.06	0.16	EEEFT1C102AL	(6)	500
	1200	10.0	10.2	G	1190	0.06	0.16	EEEFT1C122UL	(6)	500
25	100	6.3	5.8	D	300	0.26	0.14	EEEFT1E101AL	(5)	1000
	150	6.3	7.7	D8	600	0.16	0.14	EEEFTE151XAL	(5)	900
	220	6.3	7.7	D8	600	0.16	0.14	EEEFTE221XAL	(5)	900
	470	8.0	10.2	F	850	0.08	0.14	EEEFT1E471AL	(6)	500
	560	8.0	10.2	F	850	0.08	0.14	EEEFT1E561UL	(6)	500
	820	10.0	10.2	G	1190	0.06	0.14	EEEFT1E821AL	(6)	500
	1000	10.0	10.2	G	1190	0.06	0.14	EEEFT1E102UL	(6)	500
35	68	6.3	5.8	D	300	0.26	0.12	EEEFT1V680AL	(5)	1000
	100	6.3	5.8	D	300	0.26	0.12	EEEFT1V101AL	(5)	1000
	150	6.3	7.7	D8	600	0.16	0.12	EEEFTV151XAL	(5)	900
	330	8.0	10.2	F	850	0.08	0.12	EEEFT1V331AL	(6)	500
	390	8.0	10.2	F	850	0.08	0.12	EEEFT1V391UL	(6)	500
	560	10.0	10.2	G	1190	0.06	0.12	EEEFT1V561AL	(6)	500
	680	10.0	10.2	G	1190	0.06	0.12	EEEFT1V681UL	(6)	500
50	47	6.3	5.8	D	195	0.68	0.10	EEEFT1H470AL	(5)	1000
	100	6.3	7.7	D8	350	0.34	0.10	EEEFTH101XAL	(5)	900
	220	8.0	10.2	F	670	0.08	0.10	EEEFT1H221AL	(6)	500
	330	10.0	10.2	G	900	0.12	0.10	EEEFT1H331AL	(6)	500

*1: Ripple current (100 kHz / +105 °C)　*2: ESR (100 kHz / +20 °C)　*3: tan δ (120 Hz / +20 °C)

・Please refer to the page of "Reflow Profile" and "The Taping Dimensions".

Design and specifications are each subject to change without notice. Ask factory for the current technical specifications before purchase and/or use.
Should a safety concern arise regarding this product, please be sure to contact us immediately.

Panasonic
INDUSTRY

Aluminum Electrolytic Capacitors

Surface Mount Type

FP series **High temperature Lead-Free reflow (suffix : A∗)**

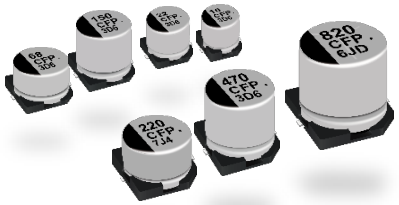

Features

- Endurance : 105 °C 2000 h
- Low ESR (30 % to 50 % less than FK series)
- Vibration-proof product (30G guaranteed) is available upon request (ø6.3 ≤)
- AEC-Q200 compliant
- RoHS compliant

Specifications

Category temp. range	–55 °C to +105 °C							
Rated voltage range	6.3 V to 50 V							
Capacitance range	10 µF to 1800 µF							
Capacitance tolerance	±20 % (120 Hz / +20 °C)							
Leakage current	I ≤ 0.01 CV or 3 (µA), whichever is greater, 2 minutes after reaching rated voltage, 20 °C *CV = (Capacitance in µF) x (Rated voltage in V)							
Dissipation factor (tan δ)	Please see the attached characteristics list							
Characteristics at low temperature	Rated voltage (V)	6.3	10	16	25	35	50	(Impedance ratio at 120 Hz)
	Z (–25 °C) / Z (+20 °C)	2	2	2	2	2	2	
	Z (–40 °C) / Z (+20 °C)	3	3	3	3	3	3	
	Z (–55 °C) / Z (+20 °C)	4	4	4	3	3	3	
Endurance	After applying rated working voltage for 2000 hours at +105 °C ± 2 °C and then being stabilized at +20 °C, capacitors shall meet the following limits.							
	Capacitance change	Within ±30 % of the initial value						
	Dissipation factor (tan δ)	≤ 200 % of the initial limit						
	Leakage current	Within the initial limit						
Shelf life	After storage for 1000 hours at +105 °C ± 2 °C with no voltage applied and then being stabilized at +20 °C, capacitors shall meet the limits specified in endurance. (Capacitors are left at room temperature and humidity for 2 hours after the test. Then, apply the rated voltage for 30min with a series protection resistance of 1000 Ω ± 10 Ω. Measure electrical characteristics after discharging the capacitor.)							
Resistance to soldering heat	After reflow soldering and then being stabilized at +20 °C, capacitors shall meet the following limits.							
	Capacitance change	Within ±10 % of the initial value						
	Dissipation factor (tan δ)	Within the initial limit						
	Leakage current	Within the initial limit						

Frequency correction factor for ripple current

Cap. (µF) \ Freq. (Hz)	120	1 k	10 k	100 k to
10 to 470	0.65	0.85	0.95	1.00
560 to 1800	0.70	0.90	0.95	1.00

Marking

Example : 6.3 V 22 µF
Marking color : BLACK

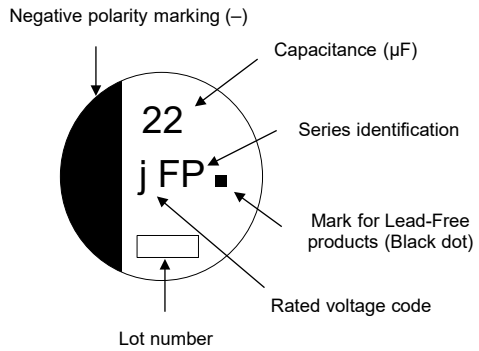

R.voltage code

j	6.3	E	25
A	10	V	35
C	16	H	50

Unit : V

Dimensions

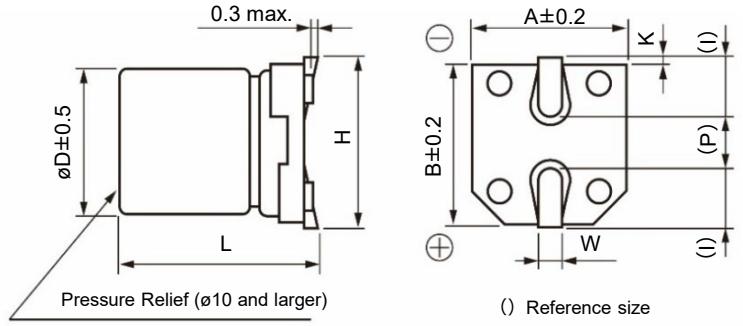

Unit : mm

Size code	øD	L	A、B	H	I	W	P	K
B	4.0	5.8±0.3	4.3	5.5 max.	1.8	0.65±0.1	1.0	$0.35^{+0.15}_{-0.20}$
C	5.0	5.8±0.3	5.3	6.5 max.	2.2	0.65±0.1	1.5	$0.35^{+0.15}_{-0.20}$
D	6.3	5.8±0.3	6.6	7.8 max.	2.6	0.65±0.1	1.8	$0.35^{+0.15}_{-0.20}$
D8	6.3	7.7±0.3	6.6	7.8 max.	2.6	0.65±0.1	1.8	$0.35^{+0.15}_{-0.20}$
E	8.0	6.2±0.3	8.3	9.5 max.	3.4	0.65±0.1	2.2	$0.35^{+0.15}_{-0.20}$
F	8.0	10.2±0.3	8.3	10.0 max.	3.4	0.90±0.2	3.1	0.70±0.2
G	10.0	10.2±0.3	10.3	12.0 max.	3.5	0.90±0.2	4.6	0.70±0.2

・The dimensions of the vibration-proof products, please refer to the page of the mounting specification.

Design and specifications are each subject to change without notice. Ask factory for the current technical specifications before purchase and/or use.
Should a safety concern arise regarding this product, please be sure to contact us immediately.

Explanation of part numbers

◇ Part number system

e.g.: EEEFP0J220AR

EEE	FP	0 J	220	A	R
Product classification	Series / Code	Rated voltage (V) / Code*	Capacitance (μF) / Code	Special code / Code	Tape width (mm) / Code

Series	Code
FP	FP

Rated voltage (V)	Code*
6.3	0J(J)
10	1A(A)
16	1C(C)
25	1E(E)
35	1V(V)
50	1H

Capacitance (μF)	Code	Capacitance (μF)	Code
10	100	390	391
22	220	470	471
33	330	560	561
47	470	680	681
68	680	820	821
100	101	1000	102
150	151	1200	122
220	221	1500	152
330	331	1800	182

Special code	Code
High-temperature lead-free reflow	A
Minia-turized product	U
D8 size	X

(Two codes can be combined)

Tape width (mm)	Code
12	R
16, 24	P

Replace for the following configuration

Configuration	Code
Vibration proof	V

*: The text "0" or "1" is omitted when the part number exceeds 12 figures.
0J →J, 1A→A, 1C→C, 1E→E, 1V→V

Characteristics list

Endurance : 105 °C 2000 h

Rated voltage (V)	Capacitance (±20 %) (μF)	Case size (mm) øD	L Standard	L Vibration-proof	Size code*1	Specification Ripple current*2 (mA rms)	ESR*3 (Ω)	tan δ*4	Part No. Standard Product	Part No. Vibration-proof product	Reflow	Min. Packaging Q'ty (pcs) Taping
6.3	22	4.0	5.8	–	B	160	0.85	0.26	EEEFP0J220AR	–	(5)	2000
	47	4.0	5.8	–	(B)	160	0.85	0.26	EEEFPJ470UAR	–	(5)	2000
		5.0	5.8	–	C	240	0.36	0.26	EEEFP0J470AR	–	(5)	1000
	100	5.0	5.8	–	(C)	240	0.36	0.26	EEEFPJ101UAR	–	(5)	1000
		6.3	5.8	6.1	D	300	0.26	0.26	EEEFP0J101AP	EEEFP0J101AV	(5)	1000
	220	6.3	5.8	6.1	D	300	0.26	0.26	EEEFP0J221AP	EEEFP0J221AV	(5)	1000
	330	6.3	7.7	8.0	D8	600	0.16	0.26	EEEFPJ331XAP	EEEFPJ331XAV	(5)	900
		8.0	6.2	6.5	E	500	0.18	0.26	EEEFP0J331AP	EEEFP0J331AV	(6)	1000
	470	8.0	10.2	10.5	F	850	0.08	0.26	EEEFP0J471AP	EEEFP0J471AV	(6)	500
	1000	8.0	10.2	10.5	F	850	0.08	0.26	EEEFP0J102AP	EEEFP0J102AV	(6)	500
	1500	10.0	10.2	10.5	G	1190	0.06	0.26	EEEFP0J152AP	EEEFP0J152AV	(6)	500
	1800	10.0	10.2	10.5	(G)	850	0.08	0.26	EEEFPJ182UAP	EEEFPJ182UAV	(6)	500
10	22	4.0	5.8	–	B	160	0.85	0.19	EEEFP1A220AR	–	(5)	2000
	33	4.0	5.8	–	(B)	160	0.85	0.19	EEEFPA330UAR	–	(5)	2000
		5.0	5.8	–	C	240	0.36	0.19	EEEFP1A330AR	–	(5)	1000
	150	6.3	5.8	6.1	D	300	0.26	0.19	EEEFP1A151AP	EEEFP1A151AV	(5)	1000
	220	6.3	7.7	8.0	D8	600	0.16	0.19	EEEFPA221XAP	EEEFPA221XAV	(5)	900
		8.0	6.2	6.5	E	500	0.18	0.19	EEEFP1A221AP	EEEFP1A221AV	(6)	1000
	330	8.0	10.2	10.5	F	850	0.08	0.19	EEEFP1A331AP	EEEFP1A331AV	(6)	500
	470	8.0	10.2	10.5	F	850	0.08	0.19	EEEFP1A471AP	EEEFP1A471AV	(6)	500
	680	8.0	10.2	10.5	F	850	0.08	0.19	EEEFP1A681AP	EEEFP1A681AV	(6)	500
	1000	10.0	10.2	10.5	G	1190	0.06	0.19	EEEFP1A102AP	EEEFP1A102AV	(6)	500
	1200	10.0	10.2	10.5	(G)	850	0.08	0.19	EEEFPA122UAP	EEEFPA122UAV	(6)	500

*1: Size code( ): Miniaturization product
*2: Ripple current (100 kHz / +105 °C)
*3: ESR (100 kHz / +20 °C)
*4: tan δ (120 Hz / +20 °C)
・Please refer to the page of "Reflow Profile" and "The Taping Dimensions".

Design and specifications are each subject to change without notice. Ask factory for the current technical specifications before purchase and/or use.
Should a safety concern arise regarding this product, please be sure to contact us immediately.

Characteristics list

Endurance : 105 °C 2000 h

Rated voltage (V)	Capacitance (±20 %) (μF)	Case size (mm) øD	Case size (mm) L Standard	Case size (mm) L Vibration-proof	Size code*1	Specification Ripple current*2 (mA rms)	Specification ESR*3 (Ω)	Specification tan δ*4	Part No. Standard Product	Part No. Vibration-proof product	Reflow	Min. Packaging Q'ty (pcs) Taping
16	10	4.0	5.8	–	B	160	0.85	0.16	EEEFP1C100AR	–	(5)	2000
	22	4.0	5.8	–	(B)	160	0.85	0.16	EEEFPC220UAR	–	(5)	2000
		5.0	5.8	–	C	240	0.36	0.16	EEEFP1C220AR	–	(5)	1000
	47	5.0	5.8	–	(C)	240	0.36	0.16	EEEFPC470UAR	–	(5)	1000
		6.3	5.8	6.1	D	300	0.26	0.16	EEEFP1C470AP	EEEFP1C470AV	(5)	1000
	68	6.3	5.8	6.1	D	300	0.26	0.16	EEEFP1C680AP	EEEFP1C680AV	(5)	1000
	100	6.3	5.8	6.1	D	300	0.26	0.16	EEEFP1C101AP	EEEFP1C101AV	(5)	1000
		6.3	7.7	8.0	D8	600	0.16	0.16	EEEFPC101XAP	EEEFPC101XAV	(5)	900
	150	6.3	7.7	8.0	D8	600	0.16	0.16	EEEFPC151XAP	EEEFPC151XAV	(5)	900
	220	6.3	7.7	8.0	D8	600	0.16	0.16	EEEFPC221XAP	EEEFPC221XAV	(5)	900
		8.0	6.2	6.5	E	500	0.18	0.16	EEEFP1C221AP	EEEFP1C221AV	(6)	1000
	330	8.0	10.2	10.5	F	850	0.08	0.16	EEEFP1C331AP	EEEFP1C331AV	(6)	500
	470	8.0	10.2	10.5	F	850	0.08	0.16	EEEFP1C471AP	EEEFP1C471AV	(6)	500
	680	10.0	10.2	10.5	G	1190	0.06	0.16	EEEFP1C681AP	EEEFP1C681AV	(6)	500
	820	10.0	10.2	10.5	(G)	850	0.08	0.16	EEEFPC821UAP	EEEFPC821UAV	(6)	500
25	10	4.0	5.8	–	B	160	0.85	0.14	EEEFP1E100AR	–	(5)	2000
	22	5.0	5.8	–	C	240	0.36	0.14	EEEFP1E220AR	–	(5)	1000
	33	5.0	5.8	–	(C)	240	0.36	0.14	EEEFPE330UAR	–	(5)	1000
		6.3	5.8	6.1	D	300	0.26	0.14	EEEFP1E330AP	EEEFP1E330AV	(5)	1000
	47	6.3	5.8	6.1	D	300	0.26	0.14	EEEFP1E470AP	EEEFP1E470AV	(5)	1000
	68	6.3	5.8	6.1	D	300	0.26	0.14	EEEFP1E680AP	EEEFP1E680AV	(5)	1000
	100	6.3	7.7	8.0	D8	600	0.16	0.14	EEEFPE101XAP	EEEFPE101XAV	(5)	900
		8.0	6.2	6.5	E	500	0.18	0.14	EEEFP1E101AP	EEEFP1E101AV	(6)	1000
	150	8.0	10.2	10.5	F	850	0.08	0.14	EEEFP1E151AP	EEEFP1E151AV	(6)	500
	220	8.0	10.2	10.5	F	850	0.08	0.14	EEEFP1E221AP	EEEFP1E221AV	(6)	500
	330	8.0	10.2	10.5	F	850	0.08	0.14	EEEFP1E331AP	EEEFP1E331AV	(6)	500
	470	10.0	10.2	10.5	G	1190	0.06	0.14	EEEFP1E471AP	EEEFP1E471AV	(6)	500
	560	10.0	10.2	10.5	(G)	850	0.08	0.14	EEEFPE561UAP	EEEFPE561UAV	(6)	500
35	10	4.0	5.8	–	(B)	160	0.85	0.12	EEEFPV100UAR	–	(5)	2000
	22	5.0	5.8	–	C	240	0.36	0.12	EEEFP1V220AR	–	(5)	1000
	33	6.3	5.8	6.1	D	300	0.26	0.12	EEEFP1V330AP	EEEFP1V330AV	(5)	1000
	47	6.3	5.8	6.1	D	300	0.26	0.12	EEEFP1V470AP	EEEFP1V470AV	(5)	1000
	68	6.3	7.7	8.0	D8	600	0.16	0.12	EEEFPV680XAP	EEEFPV680XAV	(5)	900
	100	6.3	7.7	8.0	D8	600	0.16	0.12	EEEFPV101XAP	EEEFPV101XAV	(5)	900
		8.0	10.2	10.5	F	850	0.08	0.12	EEEFP1V101AP	EEEFP1V101AV	(6)	500
	150	8.0	10.2	10.5	F	850	0.08	0.12	EEEFP1V151AP	EEEFP1V151AV	(6)	500
	220	8.0	10.2	10.5	F	850	0.08	0.12	EEEFP1V221AP	EEEFP1V221AV	(6)	500
	330	10.0	10.2	10.5	G	1190	0.06	0.12	EEEFP1V331AP	EEEFP1V331AV	(6)	500
	390	10.0	10.2	10.5	(G)	850	0.08	0.12	EEEFPV391UAP	EEEFPV391UAV	(6)	500
50	100	8.0	10.2	10.5	F	670	0.18	0.10	EEEFP1H101AP	EEEFP1H101AV	(6)	500
	220	10.0	10.2	10.5	G	900	0.12	0.10	EEEFP1H221AP	EEEFP1H221AV	(6)	500

*1: Size code( ): Miniaturization product
*2: Ripple current (100 kHz / +105 °C)
*3: ESR (100 kHz / +20 °C)
*4: tan δ (120 Hz / +20 °C)
・Please refer to the page of "Reflow Profile" and "The Taping Dimensions".

Design and specifications are each subject to change without notice. Ask factory for the current technical specifications before purchase and/or use.
Should a safety concern arise regarding this product, please be sure to contact us immediately.

Panasonic
INDUSTRY

Aluminum Electrolytic Capacitors

Surface Mount Type

Halogen-free FP series

High temperature Lead-Free reflow (suffix : A✻)

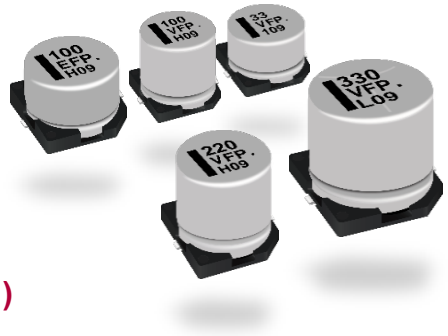

Features

- Endurance : 105 °C 2000 h
- Low ESR (30 % to 50 % less than FK series)
- AEC-Q200 compliant
- RoHS compliant

Country of origin

- Malaysia

Specifications

Category temp. range	–55 °C to +105 °C							
Rated voltage range	6.3 V to 50 V							
Capacitance range	33 µF to 1800 µF							
Capacitance tolerance	±20 % (120 Hz / +20 °C)							
Leakage current	I ≤ 0.01 CV or 3 (µA), whichever is greater, 2 minutes after reaching rated voltage, 20 °C *CV = (Capacitance in µF) x (Rated voltage in V)							
Dissipation factor (tan δ)	Please see the attached characteristics list							
Characteristics at low temperature	Rated voltage (V)	6.3	10	16	25	35	50	(Impedance ratio at 120 Hz)
	Z (–25 °C) / Z (+20 °C)	2	2	2	2	2	2	
	Z (–40 °C) / Z (+20 °C)	3	3	3	3	3	3	
	Z (–55 °C) / Z (+20 °C)	4	4	4	3	3	3	
Endurance	After applying rated working voltage for 2000 hours at +105 °C ± 2 °C and then being stabilized at +20 °C, capacitors shall meet the following limits.							
	Capacitance change	Within ±30 % of the initial value						
	Dissipation factor (tan δ)	≤ 200 % of the initial limit						
	Leakage current	Within the initial limit						
Shelf life	After storage for 1000 hours at +105 °C ± 2 °C with no voltage applied and then being stabilized at +20 °C, capacitors shall meet the limits specified in endurance. (Capacitors are left at room temperature and humidity for 2 hours after the test. Then, apply the rated voltage for 30min with a series protection resistance of 1000 Ω ± 10 Ω. Measure electrical characteristics after discharging the capacitor.)							
Resistance to soldering heat	After reflow soldering and then being stabilized at +20 °C, capacitors shall meet the following limits.							
	Capacitance change	Within ±10 % of the initial value						
	Dissipation factor (tan δ)	Within the initial limit						
	Leakage current	Within the initial limit						

Frequency correction factor for ripple current

Cap. (µF) \ Freq. (Hz)	120	1 k	10 k	100 k to
33 to 470	0.65	0.85	0.95	1.00
560 to 1800	0.70	0.90	0.95	1.00

Marking

Example : 6.3 V 100 µF
Marking color : BLACK

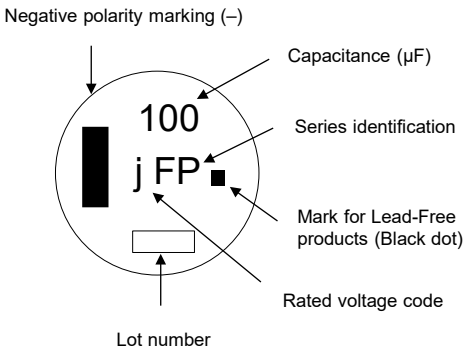

R.voltage code

j	6.3	E	25
A	10	V	35
C	16	H	50

Unit : V

Dimensions

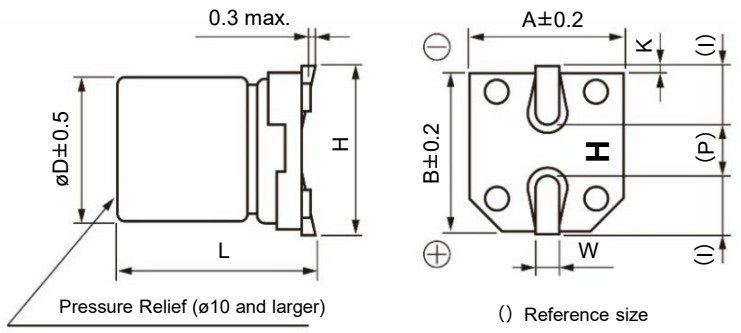

Unit : mm

Size code	øD	L	A、B	H	I	W	P	K
D	6.3	5.8±0.3	6.6	7.8 max.	2.6	0.65±0.1	1.8	$0.35^{+0.15}_{-0.20}$
D8	6.3	7.7±0.3	6.6	7.8 max.	2.6	0.65±0.1	1.8	$0.35^{+0.15}_{-0.20}$
E	8.0	6.2±0.3	8.3	9.5 max.	3.4	0.65±0.1	2.2	$0.35^{+0.15}_{-0.20}$
F	8.0	10.2±0.3	8.3	10.0 max.	3.4	0.90±0.2	3.1	0.70±0.2
G	10.0	10.2±0.3	10.3	12.0 max.	3.5	0.90±0.2	4.6	0.70±0.2

Design and specifications are each subject to change without notice. Ask factory for the current technical specifications before purchase and/or use.
Should a safety concern arise regarding this product, please be sure to contact us immediately.

Explanation of part numbers

◇ Part number system

e.g.: EEEFP0J101AL

EEE	FP	0J	101	A	L
Product classification	Series / Code	Rated voltage (V) / Code*	Capacitance (μF) / Code / Capacitance (μF) / Code	Special code / Code	Configuration / Code

Series	Code
FP	FP

Rated voltage (V)	Code*
6.3	0J(J)
10	1A(A)
16	1C(C)
25	1E(E)
35	1V(V)
50	1H

Capacitance (μF)	Code	Capacitance (μF)	Code
33	330	470	471
47	470	560	561
68	680	680	681
100	101	820	821
150	151	1000	102
220	221	1200	122
330	331	1500	152
390	391	1800	182

Special code	Code
High-temperature lead-free reflow	A
Minia-turized product	U
D8 size	X

(Two codes can be combined)

Configuration	Code
Halogen -free	L

*: The text "0" or "1" is omitted when the part number exceeds 12 figures.
0J →J, 1A→A, 1C→C, 1E→E, 1V→V

Characteristics list

Endurance : 105 °C 2000 h

Rated voltage (V)	Capacitance (±20 %) (μF)	Case size (mm) øD	Case size (mm) L	Size code*1	Specification: Ripple current*2 (mA rms)	Specification: ESR*3 (Ω)	Specification: tanδ*4	Part number	Reflow	Min. Packaging Q'ty (pcs) Taping
6.3	100	6.3	5.8	D	300	0.26	0.26	EEEFP0J101AL	(5)	1000
	220	6.3	5.8	D	300	0.26	0.26	EEEFP0J221AL	(5)	1000
	330	6.3	7.7	D8	600	0.16	0.26	EEEFPJ331XAL	(5)	900
		8.0	6.2	E	500	0.18	0.26	EEEFP0J331AL	(6)	1000
	470	8.0	10.2	F	850	0.08	0.26	EEEFP0J471AL	(6)	500
	1000	8.0	10.2	F	850	0.08	0.26	EEEFP0J102AL	(6)	500
	1500	10.0	10.2	G	1190	0.06	0.26	EEEFP0J152AL	(6)	500
	1800	10.0	10.2	(G)	850	0.08	0.26	EEEFPJ182UAL	(6)	500
10	150	6.3	5.8	D	300	0.26	0.19	EEEFP1A151AL	(5)	1000
	220	6.3	7.7	D8	600	0.16	0.19	EEEFPA221XAL	(5)	900
		8.0	6.2	E	500	0.18	0.19	EEEFP1A221AL	(6)	1000
	330	8.0	10.2	F	850	0.08	0.19	EEEFP1A331AL	(6)	500
	470	8.0	10.2	F	850	0.08	0.19	EEEFP1A471AL	(6)	500
	680	8.0	10.2	F	850	0.08	0.19	EEEFP1A681AL	(6)	500
	1000	10.0	10.2	G	1190	0.06	0.19	EEEFP1A102AL	(6)	500
	1200	10.0	10.2	(G)	850	0.08	0.19	EEEFPA122UAL	(6)	500
16	47	6.3	5.8	D	300	0.26	0.16	EEEFP1C470AL	(5)	1000
	68	6.3	5.8	D	300	0.26	0.16	EEEFP1C680AL	(5)	1000
	100	6.3	5.8	D	300	0.26	0.16	EEEFP1C101AL	(5)	1000
		6.3	7.7	D8	600	0.16	0.16	EEEFPC101XAL	(5)	900
	150	6.3	7.7	D8	600	0.16	0.16	EEEFPC151XAL	(5)	900
	220	6.3	7.7	D8	600	0.16	0.16	EEEFPC221XAL	(5)	900
		8.0	6.2	E	500	0.18	0.16	EEEFP1C221AL	(6)	1000
	330	8.0	10.2	F	850	0.08	0.16	EEEFP1C331AL	(6)	500
	470	8.0	10.2	F	850	0.08	0.16	EEEFP1C471AL	(6)	500
	680	10.0	10.2	G	1190	0.06	0.16	EEEFP1C681AL	(6)	500
	820	10.0	10.2	(G)	850	0.08	0.16	EEEFPC821UAL	(6)	500

*1: Size code( ): Miniaturization product
*2: Ripple current (100 kHz / +105 °C)
*3: ESR (100 kHz / +20 °C)
*4: tan δ (120 Hz / +20 °C)
・Please refer to the page of "Reflow Profile" and "The Taping Dimensions".

Design and specifications are each subject to change without notice. Ask factory for the current technical specifications before purchase and/or use.
Should a safety concern arise regarding this product, please be sure to contact us immediately.

Characteristics list

Endurance : 105 °C 2000 h

Rated voltage (V)	Capacitance (±20 %) (μF)	Case size (mm)		Size code*1	Specification			Part number	Reflow	Min. Packaging Q'ty (pcs)
		øD	L		Ripple current*2 (mA rms)	ESR*3 (Ω)	tanδ*4			Taping
25	33	6.3	5.8	D	300	0.26	0.14	EEEFP1E330AL	(5)	1000
	47	6.3	5.8	D	300	0.26	0.14	EEEFP1E470AL	(5)	1000
	68	6.3	5.8	D	300	0.26	0.14	EEEFP1E680AL	(5)	1000
	100	6.3	7.7	D8	600	0.16	0.14	EEEFPE101XAL	(5)	900
		8.0	6.2	E	500	0.18	0.14	EEEFP1E101AL	(6)	1000
	150	8.0	10.2	F	850	0.08	0.14	EEEFP1E151AL	(6)	500
	220	8.0	10.2	F	850	0.08	0.14	EEEFP1E221AL	(6)	500
	330	8.0	10.2	F	850	0.08	0.14	EEEFP1E331AL	(6)	500
	470	10.0	10.2	G	1190	0.06	0.14	EEEFP1E471AL	(6)	500
	560	10.0	10.2	(G)	850	0.08	0.14	EEEFPE561UAL	(6)	500
35	33	6.3	5.8	D	300	0.26	0.12	EEEFP1V330AL	(5)	1000
	47	6.3	5.8	D	300	0.26	0.12	EEEFP1V470AL	(5)	1000
	68	6.3	7.7	D8	600	0.16	0.12	EEEFPV680XAL	(5)	900
	100	6.3	7.7	D8	600	0.16	0.12	EEEFPV101XAL	(5)	900
		8.0	10.2	F	850	0.08	0.12	EEEFP1V101AL	(6)	500
	150	8.0	10.2	F	850	0.08	0.12	EEEFP1V151AL	(6)	500
	220	8.0	10.2	F	850	0.08	0.12	EEEFP1V221AL	(6)	500
	330	10.0	10.2	G	1190	0.06	0.12	EEEFP1V331AL	(6)	500
	390	10.0	10.2	(G)	850	0.08	0.12	EEEFPV391UAL	(6)	500
50	100	8.0	10.2	F	670	0.18	0.1	EEEFP1H101AL	(6)	500
	220	10.0	10.2	G	900	0.12	0.10	EEEFP1H221AL	(6)	500

*1: Size code( ): Miniaturization product
*2: Ripple current (100 kHz / +105 °C)
*3: ESR (100 kHz / +20 °C)
*4: tan δ (120 Hz / +20 °C)
・Please refer to the page of "Reflow Profile" and "The Taping Dimensions".

Design and specifications are each subject to change without notice. Ask factory for the current technical specifications before purchase and/or use.
Should a safety concern arise regarding this product, please be sure to contact us immediately.

Panasonic
INDUSTRY

Aluminum Electrolytic Capacitors

Surface Mount Type

Halogen-free FH series

High temperature Lead-Free reflow (except ≥ 50 V)

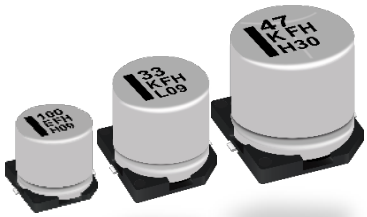

Features

- Endurance : 105 °C 10000 h (ø6.3 x 7.7 : 7000 h, ≥ 50 V : 7000 h)
- Long life : 40 % to 100% higher than series FK (suffix G*)
- RoHS compliant
- AEC-Q200 compliant

Country of origin

- Malaysia

Specifications

Category temp. range	–55 °C to +105 °C										
Rated voltage range	6.3 V to 100 V										
Capacitance range	10 µF to 680 µF										
Capacitance tolerance	±20 % (120 Hz / +20 °C)										
Leakage current	I ≤ 0.01 CV or 3 (µA), whichever is greater, 2 minutes after reaching rated voltage, 20 °C *CV = (Capacitance in µF) x (Rated voltage in V)										
Dissipation factor (tan δ)	Please see the attached characteristics list										
Characteristics at low temperature	Rated voltage (V)	6.3	10	16	25	35	50	63	80	100	(Impedance ratio at 120 Hz)
	Z (–25 °C) / Z (+20 °C)	3	3	2	2	2	2	2	2	2	
	Z (–40 °C) / Z (+20 °C)	4	4	3	3	3	3	3	3	3	
	Z (–55 °C) / Z (+20 °C)	8	8	6	5	4	3	4	4	4	
Endurance	After applying rated working voltage for 10000 hours(ø6.3x7.7 : 7000 h, ≥ 50V : 7000 h) at +105 °C ± 2 °C and then being stabilized at +20 °C, capacitors shall meet the following limits.										
	Capacitance change	Within ±30 % of the initial value (≥ 50 V size code F&G : ±35%)									
	Dissipation factor (tan δ)	≤ 300 % of the initial limit (≥ 50 V size code F&G : ≤ 350%)									
	Leakage current	Within the initial limit									
Shelf life	After storage for 1000 hours at +105 °C ± 2 °C with no voltage applied and then being stabilized at +20 °C, capacitors shall meet the limits specified in endurance. (Capacitors are left at room temperature and humidity for 2 hours after the test. Then, apply the rated voltage for 30min with a series protection resistance of 1000 Ω ± 10 Ω. Measure electrical characteristics after discharging the capacitor.)										
Resistance to soldering heat	After reflow soldering and then being stabilized at +20 °C, capacitors shall meet the following limits.										
	Capacitance change	Within ±10 % of the initial value									
	Dissipation factor (tan δ)	Within the initial limit									
	Leakage current	Within the initial limit									

Frequency correction factor for ripple current

Frequency (Hz)	120	1 k	10 k	100 k to
Correction factor	0.65	0.85	0.95	1.00

Marking

Example : 6.3 V 680 µF
Marking color : BLACK

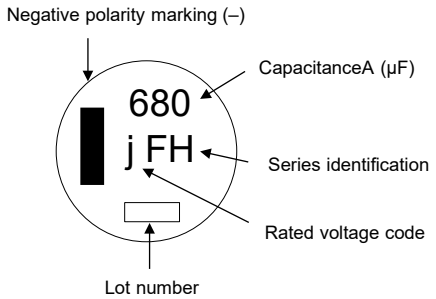

R.voltage code

Unit : V

j	6.3	H	50
A	10	J	63
C	16	K	80
E	25	2A	100
V	35		

Dimensions

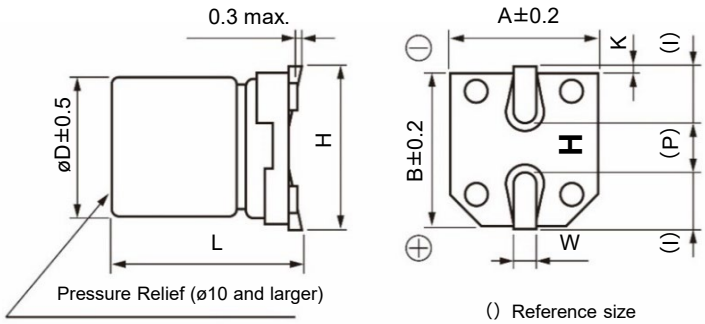

Unit : mm

Size code	øD	L	A, B	H	I	W	P	K
D8	6.3	7.7±0.3	6.6	7.8 max.	2.6	0.65±0.1	1.8	$0.35^{+0.15}_{-0.20}$
F	8.0	10.2±0.3	8.3	10.0 max.	3.4	0.90±0.2	3.1	0.70±0.2
G	10.0	10.2±0.3	10.3	12.0 max.	3.5	0.90±0.2	4.6	0.70±0.2

Design and specifications are each subject to change without notice. Ask factory for the current technical specifications before purchase and/or use.
Should a safety concern arise regarding this product, please be sure to contact us immediately.

Explanation of part numbers

◇ Part number system

e.g.: EEEFH0J101XL

EEE	FH	0J	101	X	L
Product classification	Series / Code	Rated voltage (V) / Code	Capacitance (μF) / Code	Special code / Code	Configuration / Code

Series	Code
FH	FH

Rated voltage (V)	Code
6.3	0J
10	1A
16	1C
25	1E
35	1V
50	1H
63	1J
80	1K
100	2A

Capacitance (μF)	Code	Capacitance (μF)	Code
10	100	330	331
22	220	390	391
33	330	470	471
47	470	560	561
100	101	680	681
220	221		

Special code	Code
Minia-turized product	U
D8 size	X
Others	–

Configuration	Code
Halogen -free	L

Characteristics list

Endurance : 105 °C 10000 h (ø6.3 x 7.7 : 7000 h, ≥ 50 V : 7000 h)

Rated voltage (V)	Capacitance (±20 %) (μF)	Case size (mm) øD	Case size (mm) L	Size code	Specification: Ripple current*1 (mA rms)	Specification: ESR*2 (Ω)	Specification: tanδ*3	Part number	Reflow	Min. Packaging Q'ty (pcs) Taping
6.3	100	6.3	7.7	D8	300	0.45	0.32	EEEFH0J101XL	(8)	900
	330	8.0	10.2	F	600	0.20	0.32	EEEFH0J331L	(8)	500
	470	8.0	10.2	F	600	0.20	0.32	EEEFH0J471L	(8)	500
	560	8.0	10.2	F	600	0.20	0.32	EEEFH0J561L	(8)	500
	680	10.0	10.2	G	850	0.15	0.32	EEEFH0J681L	(8)	500
10	100	6.3	7.7	D8	300	0.45	0.30	EEEFH1A101XL	(8)	900
	330	8.0	10.2	F	600	0.20	0.30	EEEFH1A331L	(8)	500
	470	8.0	10.2	F	600	0.20	0.30	EEEFH1A471L	(8)	500
	560	8.0	10.2	F	600	0.20	0.30	EEEFH1A561L	(8)	500
	680	10.0	10.2	G	850	0.15	0.30	EEEFH1A681L	(8)	500
16	47	6.3	7.7	D8	300	0.45	0.23	EEEFH1C470XL	(8)	900
	100	6.3	7.7	D8	300	0.45	0.23	EEEFH1C101XL	(8)	900
	220	8.0	10.2	F	600	0.20	0.23	EEEFH1C221L	(8)	500
	330	8.0	10.2	F	600	0.20	0.23	EEEFH1C331L	(8)	500
	390	8.0	10.2	F	600	0.20	0.23	EEEFH1C391L	(8)	500
	470	10.0	10.2	G	850	0.15	0.23	EEEFH1C471L	(8)	500
	680	10.0	10.2	G	850	0.15	0.23	EEEFH1C681L	(8)	500
25	33	6.3	7.7	D8	300	0.45	0.18	EEEFH1E330XL	(8)	900
	47	6.3	7.7	D8	300	0.45	0.18	EEEFH1E470XL	(8)	900
	100	6.3	7.7	D8	300	0.45	0.18	EEEFH1E101XL	(8)	900
	220	8.0	10.2	F	600	0.20	0.18	EEEFH1E221L	(8)	500
	330	8.0	10.2	F	600	0.20	0.18	EEEFH1E331UL	(8)	500
	330	10.0	10.2	G	850	0.15	0.18	EEEFH1E331L	(8)	500
	470	10.0	10.2	G	850	0.15	0.18	EEEFH1E471L	(8)	500
35	10	6.3	7.7	D8	300	0.45	0.16	EEEFH1V100XL	(8)	900
	22	6.3	7.7	D8	300	0.45	0.16	EEEFH1V220XL	(8)	900
	33	6.3	7.7	D8	300	0.45	0.16	EEEFH1V330XL	(8)	900
	47	6.3	7.7	D8	300	0.45	0.16	EEEFH1V470XL	(8)	900
	100	8.0	10.2	F	600	0.20	0.16	EEEFH1V101L	(8)	500
	220	8.0	10.2	F	600	0.20	0.16	EEEFH1V221UL	(8)	500
	220	10.0	10.2	G	850	0.15	0.16	EEEFH1V221L	(8)	500
	330	10.0	10.2	G	850	0.15	0.16	EEEFH1V331L	(8)	500
	390	10.0	10.2	G	850	0.15	0.16	EEEFH1V391L	(8)	500
50	47	8.0	10.2	F	350	0.75	0.14	EEEFH1H470L	(2)	500
	100	10.0	10.2	G	670	0.50	0.14	EEEFH1H101L	(2)	500
63	47	8.0	10.2	F	250	1.00	0.12	EEEFH1J470L	(2)	500
	100	10.0	10.2	G	400	0.80	0.12	EEEFH1J101L	(2)	500
80	33	8.0	10.2	F	130	1.30	0.12	EEEFH1K330L	(2)	500
	47	10.0	10.2	G	200	1.00	0.12	EEEFH1K470L	(2)	500
100	22	8.0	10.2	F	130	1.30	0.10	EEEFH2A220L	(2)	500
	33	10.0	10.2	G	200	1.00	0.10	EEEFH2A330L	(2)	500

*1: Ripple current (100 kHz / +105 °C)　*2: ESR (100 kHz / +20 °C)　*3: tan δ (120 Hz / +20 °C)

・Please refer to the page of "Reflow Profile" and "The Taping Dimensions".

Design and specifications are each subject to change without notice. Ask factory for the current technical specifications before purchase and/or use.
Should a safety concern arise regarding this product, please be sure to contact us immediately.

Panasonic
INDUSTRY

Aluminum Electrolytic Capacitors

Surface Mount Type

TG series

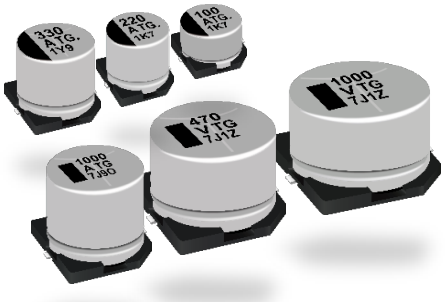

Features

- Endurance : 125 °C 1000 h to 2000 h
- Miniaturization (40 % less than TA series)
- Low ESR (Low temp)
- Vibration-proof product (30G guaranteed) is available upon request
- AEC-Q200 compliant
- RoHS compliant (Part No. ø8 to ø10 : EEE✻, ø12.5 to ø18 : EEV✻)

Specifications

Category temp. range	–40 °C to +125 °C										
Rated voltage range	10 V to 100 V										
Capacitance range	10 µF to 4700 µF										
Capacitance tolerance	±20 % (120 Hz / +20 °C)										
Leakage current	I ≤ 0.01 CV（µA） After 2 minutes										
Dissipation factor (tan δ)	Please see the attached characteristics list										
Characteristics at low temperature	Rated voltage (V)	10	16	25	35	50	63	80	100	(Impedance ratio at 120 Hz)	
	Z (–25 °C) / Z (+20 °C)	3	2	2	2	2	2	2	2		
	Z (–40 °C) / Z (+20 °C)	6	4	4	3	3	3	3	3		
Endurance	After applying rated working voltage for 1000 hours (ø8×6.2), 2000 hours (ø8×10.2 ≤) at +125 °C ± 2 °C and then being stabilized at +20 °C, capacitors shall meet the following limits.										
	Capacitance change	Within ±30 % of the initial value (code U : ±35 %)									
	Dissipation factor (tan δ)	≤ 300 % of the initial limit (code U : ±350 %)									
	Leakage current	Within the initial limit									
Shelf life	After storage for 1000 hours at +125 °C ± 2 °C with no voltage applied and then being stabilized at +20 °C, capacitors shall meet the limits specified in endurance. (Capacitors are left at room temperature and humidity for 2 hours after the test. Then, apply the rated voltage for 30min with a series protection resistance of 1000 Ω ± 10 Ω. Measure electrical characteristics after discharging the capacitor.)										
Resistance to soldering heat	After reflow soldering and then being stabilized at +20 °C, capacitors shall meet the following limits.										
	Capacitance change	Within ±10 % of the initial value									
	Dissipation factor (tan δ)	Within the initial limit									
	Leakage current	Within the initial limit									

Frequency correction factor for ripple current

Frequency (Hz)	120	1 k	10 k	100 k to
Correction factor	0.65	0.85	0.95	1.00

Marking

Example : 10 V 100 µF Marking color : BLACK

・Lead-Free (≤ ø10)

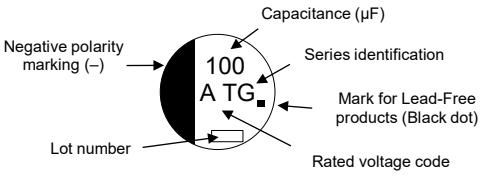

Example: 10 V 1000 µF Marking color : BLACK

・Lead-Free (≥ ø12.5)

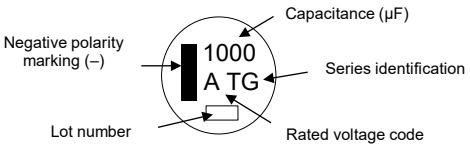

R.voltage code Unit : V

A	10	H	50
C	16	J	63
E	25	K	80
V	35	2A	100

Dimensions

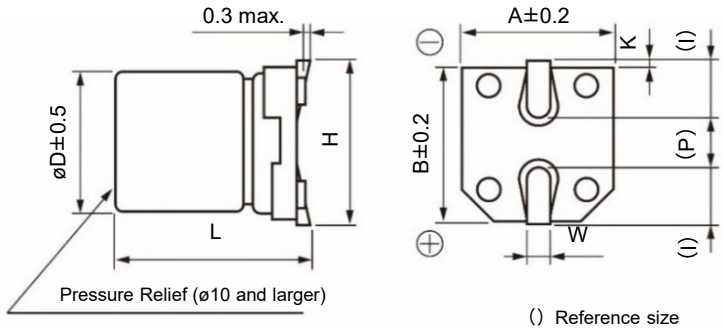

Unit : mm

Size code	øD	L	A、B	H	I	W	P	K
E	8.0	6.2±0.3	8.3	9.5 max.	3.4	0.65±0.1	2.2	$0.35^{+0.15}_{-0.20}$
F	8.0	10.2±0.3	8.3	10.0 max.	3.4	0.90±0.2	3.1	0.70±0.2
G	10.0	10.2±0.3	10.3	12.0 max.	3.5	0.90±0.2	4.6	0.70±0.2
H13	12.5	13.5±0.5	13.5	15.0 max.	4.7	0.90±0.3	4.4	0.70±0.3
J16	16.0	16.5±0.5	17.0	19.0 max.	5.5	1.20±0.3	6.7	0.70±0.3
K16	18.0	16.5±0.5	19.0	21.0 max.	6.7	1.20±0.3	6.7	0.70±0.3

・The dimensions of the vibration-proof products, please refer to the page of the mounting specification.

Design and specifications are each subject to change without notice. Ask factory for the current technical specifications before purchase and/or use.
Should a safety concern arise regarding this product, please be sure to contact us immediately.

Explanation of part numbers

◇ Part number system

e.g.: EEETG1A221UP

EEE	TG	1A	221	U	P
Product classification*	Series / Code	Rated voltage (V) / Code	Capacitance (μF) / Code	Special code / Code	Tape width (mm) / Code

Series	Code
TG	TG

*: øD ≧ 12.5mm → EEV

Rated voltage (V)	Code
10	1A
16	1C
25	1E
35	1V
50	1H
63	1J
80	1K
100	2A

Capacitance (μF)	Code	Capacitance (μF)	Code
10	100	470	471
22	220	680	681
33	330	1000	102
47	470	1500	152
100	101	2200	222
220	221	3300	332
330	331	4700	472

Special code	Code
Miniaturized product	U
Others	-

Tape width (mm)	Code
16, 24	P
32	Q
44	M

Characteristics list

Endurance : 125 °C 1000 h (ø8×10.2 : 2000 h)

Rated voltage (V)	Capacitance (±20 %) (μF)	Case size (mm) øD	Case size (mm) L	Size code*1	Specification: Ripple current*2 (mA rms)	Specification: ESR*3 (Ω)	Specification: tanδ*4	Part No.	Reflow	Min. Packaging Q'ty (pcs) Taping
10	100	8.0	6.2	E	100	1.00	0.30	EEETG1A101P	(2)	1000
	220	8.0	6.2	(E)	100	1.00	0.30	EEETG1A221UP	(2)	1000
		8.0	10.2	F	197	0.50	0.30	EEETG1A221P	(2)	500
	330	8.0	10.2	(F)	197	0.50	0.30	EEETG1A331UP	(2)	500
		10.0	10.2	G	270	0.30	0.30	EEETG1A331P	(2)	500
	470	10.0	10.2	(G)	270	0.30	0.30	EEETG1A471UP	(2)	500
	1000	12.5	13.5	H13	800	0.12	0.30	EEVTG1A102Q	(3)	200
	1500	12.5	13.5	(H13)	800	0.12	0.30	EEVTG1A152UQ	(3)	200
	2200	16.0	16.5	J16	1100	0.08	0.32	EEVTG1A222M	(3)	125
	3300	16.0	16.5	(J16)	1100	0.08	0.34	EEVTG1A332UM	(3)	125
		18.0	16.5	K16	1300	0.075	0.34	EEVTG1A332M	(3)	125
	4700	18.0	16.5	K16	1300	0.075	0.36	EEVTG1A472M	(3)	125
16	100	8.0	10.2	F	197	0.50	0.23	EEETG1C101P	(2)	500
	220	8.0	10.2	(F)	197	0.50	0.23	EEETG1C221UP	(2)	500
		10.0	10.2	G	270	0.30	0.23	EEETG1C221P	(2)	500
	330	10.0	10.2	(G)	270	0.30	0.23	EEETG1C331UP	(2)	500
		12.5	13.5	H13	800	0.12	0.23	EEVTG1C331Q	(3)	200
	470	12.5	13.5	H13	800	0.12	0.23	EEVTG1C471Q	(3)	200
	680	12.5	13.5	H13	800	0.12	0.23	EEVTG1C681Q	(3)	200
	1000	12.5	13.5	(H13)	800	0.12	0.23	EEVTG1C102UQ	(3)	200
		16.0	16.5	J16	1100	0.08	0.23	EEVTG1C102M	(3)	125
	2200	16.0	16.5	(J16)	1100	0.08	0.25	EEVTG1C222UM	(3)	125
		18.0	16.5	K16	1300	0.075	0.25	EEVTG1C222M	(3)	125
	3300	18.0	16.5	K16	1300	0.075	0.27	EEVTG1C332M	(3)	125
25	47	8.0	6.2	E	100	1.00	0.18	EEETG1E470P	(2)	1000
	100	8.0	6.2	(E)	100	1.00	0.18	EEETG1E101UP	(2)	1000
		8.0	10.2	F	197	0.50	0.18	EEETG1E101P	(2)	500
	220	8.0	10.2	(F)	197	0.50	0.18	EEETG1E221UP	(2)	500
		10.0	10.2	G	270	0.30	0.18	EEETG1E221P	(2)	500
	330	10.0	10.2	(G)	270	0.30	0.18	EEETG1E331UP	(2)	500
		12.5	13.5	H13	800	0.12	0.18	EEVTG1E331Q	(3)	200
	470	12.5	13.5	H13	800	0.12	0.18	EEVTG1E471Q	(3)	200
	680	12.5	13.5	(H13)	800	0.12	0.18	EEVTG1E681UQ	(3)	200
		16.0	16.5	J16	1100	0.08	0.18	EEVTG1E681M	(3)	125
	1000	16.0	16.5	(J16)	1100	0.08	0.18	EEVTG1E102UM	(3)	125
		18.0	16.5	K16	1300	0.075	0.18	EEVTG1E102M	(3)	125
	2200	18.0	16.5	K16	1300	0.075	0.20	EEVTG1E222M	(3)	125

*1: Size code( ): Miniaturization product
*2: Ripple current (100 kHz / +125 °C)
*3: ESR (100 kHz / +20 °C)
*4: tan δ (120 Hz / +20 °C)

・Please refer to the page of "Reflow Profile" and "The Taping Dimensions".
・When requesting vibration-proof product, please put the last “V” instead to “P”, “Q”, or “M”

Design and specifications are each subject to change without notice. Ask factory for the current technical specifications before purchase and/or use.
Should a safety concern arise regarding this product, please be sure to contact us immediately.

Characteristics list

Endurance : 125 °C 1000 h (ø8×10.2 : 2000 h)

Rated voltage (V)	Capacitance (±20 %) (μF)	Case size (mm)		Size code*1	Specification			Part No.	Reflow	Min. Packaging Q'ty (pcs)
		øD	L		Ripple current*2 (mA rms)	ESR*3 (Ω)	tanδ*4			Taping
35	33	8.0	6.2	E	100	1.00	0.16	EEETG1V330P	(2)	1000
	47	8.0	6.2	(E)	100	1.00	0.16	EEETG1V470UP	(2)	1000
		8.0	10.2	F	197	0.50	0.16	EEETG1V470P	(2)	500
	100	8.0	10.2	(F)	197	0.50	0.16	EEETG1V101UP	(2)	500
		10.0	10.2	G	270	0.30	0.16	EEETG1V101P	(2)	500
	220	10.0	10.2	(G)	270	0.30	0.16	EEETG1V221UP	(2)	500
	330	12.5	13.5	H13	800	0.12	0.16	EEVTG1V331Q	(3)	200
	470	12.5	13.5	(H13)	800	0.12	0.16	EEVTG1V471UQ	(3)	200
		16.0	16.5	J16	1100	0.08	0.16	EEVTG1V471M	(3)	125
	680	16.0	16.5	(J16)	1100	0.08	0.16	EEVTG1V681UM	(3)	125
		18.0	16.5	K16	1300	0.075	0.16	EEVTG1V681M	(3)	125
	1000	18.0	16.5	K16	1300	0.075	0.16	EEVTG1V102M	(3)	125
50	10	8.0	6.2	E	80	1.60	0.14	EEETG1H100P	(2)	1000
	22	8.0	6.2	E	80	1.60	0.14	EEETG1H220P	(2)	1000
	33	8.0	6.2	(E)	80	1.60	0.14	EEETG1H330UP	(2)	1000
		8.0	10.2	F	133	0.75	0.14	EEETG1H330P	(2)	500
	47	8.0	10.2	(F)	133	0.75	0.14	EEETG1H470UP	(2)	500
		10.0	10.2	G	221	0.50	0.14	EEETG1H470P	(2)	500
	100	10.0	10.2	(G)	221	0.50	0.14	EEETG1H101UP	(2)	500
	220	12.5	13.5	H13	600	0.23	0.14	EEVTG1H221Q	(3)	200
	330	12.5	13.5	H13	600	0.23	0.14	EEVTG1H331Q	(3)	200
	470	16.0	16.5	J16	900	0.15	0.14	EEVTG1H471M	(3)	125
	680	16.0	16.5	(J16)	900	0.15	0.14	EEVTG1H681UM	(3)	125
		18.0	16.5	K16	950	0.14	0.14	EEVTG1H681M	(3)	125
	1000	18.0	16.5	K16	950	0.14	0.14	EEVTG1H102M	(3)	125
63	10	8.0	6.2	E	55	2.20	0.12	EEETG1J100P	(2)	1000
	22	8.0	10.2	F	100	1.00	0.12	EEETG1J220P	(2)	500
	33	8.0	10.2	(F)	100	1.00	0.12	EEETG1J330UP	(2)	500
		10.0	10.2	G	150	0.80	0.12	EEETG1J330P	(2)	500
	47	8.0	10.2	(F)	100	1.00	0.12	EEETG1J470UP	(2)	500
		10.0	10.2	G	150	0.80	0.12	EEETG1J470P	(2)	500
	100	10.0	10.2	(G)	150	0.80	0.12	EEETG1J101UP	(2)	500
		12.5	13.5	H13	350	0.26	0.12	EEVTG1J101Q	(3)	200
	220	12.5	13.5	H13	350	0.26	0.12	EEVTG1J221Q	(3)	200
	330	16.0	16.5	J16	500	0.18	0.12	EEVTG1J331M	(3)	125
	470	16.0	16.5	J16	500	0.18	0.12	EEVTG1J471M	(3)	125
80	10	8.0	10.2	F	70	1.30	0.12	EEETG1K100P	(2)	500
	22	8.0	10.2	(F)	70	1.30	0.12	EEETG1K220UP	(2)	500
		10.0	10.2	G	90	1.00	0.12	EEETG1K220P	(2)	500
	33	8.0	10.2	(F)	70	1.30	0.12	EEETG1K330UP	(2)	500
		10.0	10.2	G	90	1.00	0.12	EEETG1K330P	(2)	500
	47	10.0	10.2	(G)	90	1.00	0.12	EEETG1K470UP	(2)	500
		12.5	13.5	H13	250	0.42	0.12	EEVTG1K470Q	(3)	200
	100	12.5	13.5	(H13)	250	0.42	0.12	EEVTG1K101UQ	(3)	200
		16.0	16.5	J16	350	0.30	0.12	EEVTG1K101M	(3)	125
	220	16.0	16.5	(J16)	350	0.30	0.12	EEVTG1K221UM	(3)	125
		18.0	16.5	K16	400	0.28	0.12	EEVTG1K221M	(3)	125
	330	16.0	16.5	(J16)	350	0.30	0.12	EEVTG1K331UM	(3)	125
		18.0	16.5	K16	400	0.28	0.12	EEVTG1K331M	(3)	125
	470	18.0	16.5	K16	400	0.28	0.12	EEVTG1K471M	(3)	125
100	10	8.0	10.2	F	70	1.30	0.10	EEETG2A100P	(2)	500
	22	8.0	10.2	(F)	70	1.30	0.10	EEETG2A220UP	(2)	500
		10.0	10.2	G	90	1.00	0.10	EEETG2A220P	(2)	500
	33	10.0	10.2	G	90	1.00	0.10	EEETG2A330P	(2)	500
	47	12.5	13.5	H13	250	0.42	0.10	EEVTG2A470Q	(3)	200
	100	16.0	16.5	J16	350	0.30	0.10	EEVTG2A101M	(3)	125
	220	18.0	16.5	K16	400	0.28	0.10	EEVTG2A221M	(3)	125
	330	18	16.5	K16	400	0.28	0.10	EEVTG2A331M	(3)	125

*1: Size code( ): Miniaturization product
*2: Ripple current (100 kHz / +125 °C)
*3: ESR (100 kHz / +20 °C)
*4: tan δ (120 Hz / +20 °C)

・Please refer to the page of "Reflow Profile" and "The Taping Dimensions".
・When requesting vibration-proof product, please put the last “V” instead to “P”, “Q”, or “M”

Design and specifications are each subject to change without notice. Ask factory for the current technical specifications before purchase and/or use.
Should a safety concern arise regarding this product, please be sure to contact us immediately.

Panasonic
INDUSTRY

Aluminum Electrolytic Capacitors

Surface Mount Type

TK series

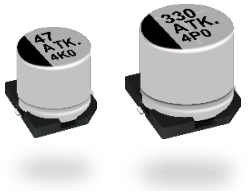

Features

- Endurance : 125 °C 3000 h
- Low ESR at –40 °C (50 % lower than TG series)
- Added ESR specification after the endurance test
- Vibration-proof product (30G guaranteed) is available upon request
- AEC-Q200 compliant
- RoHS compliant

Specifications

Category temp. range	–40 °C to +125 °C					
Rated voltage range	10 V to 35 V					
Capacitance range	47 µF to 470 µF					
Capacitance tolerance	±20 % (120 Hz / +20 °C)					
Leakage current	I ≤ 0.01 CV（µA）After 2 minutes					
Dissipation factor (tan δ)	Please see the attached characteristics list					
Characteristics at low temperature	Rated voltage (V)	10	16	25	35	(Impedance ratio at 120 Hz)
	Z (–25 °C) / Z (+20 °C)	3	2	2	2	
	Z (–40 °C) / Z (+20 °C)	4	3	3	3	
Endurance	After the life test with DC rated woking voltage at +125 °C ± 2 °C for 3000 hours, and then being stabilized at 20 °C, the capacitors shall meet the limits specified below.					
	Capacitance change	Within ±30 % of the initial value (code U : ±35 %)				
	Dissipation factor (tan δ)	≤ 300 % of the initial limit (code U : ±350 %)				
	Leakage current	Within the initial limit				
Shelf life	After storage for 1000 hours at +125 °C ± 2 °C with no voltage applied and then being stabilized at +20 °C, capacitors shall meet the limits specified in endurance. (Capacitors are left at room temperature and humidity for 2 hours after the test. Then, apply the rated voltage for 30min with a series protection resistance of 1000 Ω ± 10 Ω. Measure electrical characteristics after discharging the capacitor.)					
ESR after the life test	After the life test with DC rated working voltage at +125 °C ± 2 °C for 3000 hours, and then being stabilized at 20 °C, ESR value shall meet the specified below.					
	After 1000 hours	20 °C	≤ 150 % of the initial limit			
		–40 °C	≤ 200 % of the initial limit			
	After 2000 hours	20 °C	≤ 300 % of the initial limit			
		–40 °C	≤ 400 % of the initial limit			
	After 3000 hours	20 °C	≤ 1000 % of the initial limit			
		–40 °C	≤ 1500 % of the initial limit			

Frequency correction factor for ripple current

Frequency (Hz)	120	1 k	10 k	100 k to
Correction factor	0.65	0.85	0.95	1.00

Marking

Example : 10 V 220 µF
Marking color : BLACK

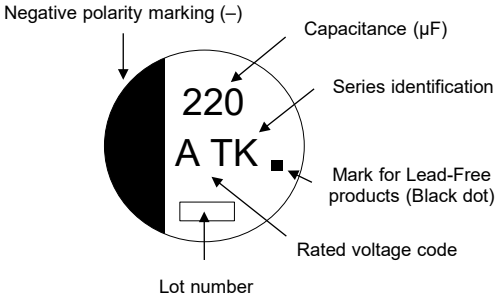

R.voltage code

A	10	E	25
C	16	V	35

Unit : V

Dimensions

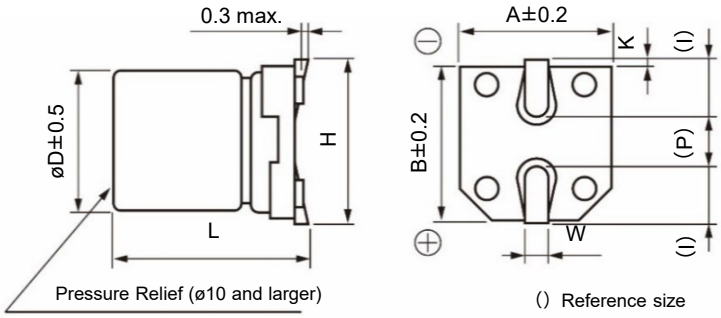

Unit : mm

Size code	øD	L	A, B	H	I	W	P	K
F	8.0	10.2±0.3	8.3	10.0 max.	3.4	0.90±0.2	3.1	0.70±0.2
G	10.0	10.2±0.3	10.3	12.0 max.	3.5	0.90±0.2	4.6	0.70±0.2

・The dimensions of the vibration-proof products, please refer to the page of the mounting specification.

Design and specifications are each subject to change without notice. Ask factory for the current technical specifications before purchase and/or use.
Should a safety concern arise regarding this product, please be sure to contact us immediately.

Explanation of part numbers

◇ Part number system

e.g.: EEETK1A331UP

EEE	TK	1A	331	U	P
Product classification	Series / Code	Rated voltage (V) / Code	Capacitance (μF) / Code	Special code / Code	Tape width (mm) / Code

Series	Code
TK	TK

Rated voltage (V)	Code
10	1A
16	1C
25	1E
35	1V

Capacitance (μF)	Code	Capacitance (μF)	Code
47	470	330	331
100	101	470	471
220	221		

Special code	Code
Miniaturized product	U
Others	-

Tape width (mm)	Code
16, 24	P

Characteristics list

Endurance : 125 °C 3000 h

Rated voltage (V)	Capacitance (±20 %) (μF)	Case size (mm) øD	Case size (mm) L	Size code*1	Specification: Ripple current*2 (mA rms)	ESR (100 kHz) (Ω) +20 °C	ESR (100 kHz) (Ω) –40 °C	tan δ*3	Part No.	Reflow	Min. Packaging Q'ty (pcs) Taping
10	220	8.0	10.2	F	197	0.3	5.0	0.30	EEETK1A221P	(8)	500
	330	8.0	10.2	(F)	197	0.3	5.0	0.30	EEETK1A331UP	(8)	500
		10.0	10.2	G	270	0.2	3.0	0.30	EEETK1A331P	(8)	500
	470	10.0	10.2	(G)	270	0.2	3.0	0.30	EEETK1A471UP	(8)	500
16	100	8.0	10.2	F	197	0.3	5.0	0.23	EEETK1C101P	(8)	500
	220	8.0	10.2	(F)	197	0.3	5.0	0.23	EEETK1C221UP	(8)	500
		10.0	10.2	G	270	0.2	3.0	0.23	EEETK1C221P	(8)	500
	330	10.0	10.2	(G)	270	0.2	3.0	0.23	EEETK1C331UP	(8)	500
25	100	8.0	10.2	F	197	0.3	5.0	0.18	EEETK1E101P	(8)	500
	220	8.0	10.2	(F)	197	0.3	5.0	0.18	EEETK1E221UP	(8)	500
		10.0	10.2	G	270	0.2	3.0	0.18	EEETK1E221P	(8)	500
	330	10.0	10.2	(G)	270	0.2	3.0	0.18	EEETK1E331UP	(8)	500
35	47	8.0	10.2	F	197	0.3	5.0	0.16	EEETK1V470P	(8)	500
	100	8.0	10.2	(F)	197	0.3	5.0	0.16	EEETK1V101UP	(8)	500
		10.0	10.2	G	270	0.2	3.0	0.16	EEETK1V101P	(8)	500
	220	10.0	10.2	(G)	270	0.2	3.0	0.16	EEETK1V221UP	(8)	500

*1: Size code( ): Miniaturization product
*2: Ripple current (100 kHz / +125 °C)
*3: tan δ (120 Hz / +20 °C)
・Please refer to the page of "Reflow Profile" and "The Taping Dimensions".
・When requesting vibration-proof product, please put the last “V” instead to “P”

Design and specifications are each subject to change without notice. Ask factory for the current technical specifications before purchase and/or use.
Should a safety concern arise regarding this product, please be sure to contact us immediately.

Panasonic
INDUSTRY

Aluminum Electrolytic Capacitors

Surface Mount Type

TK series (Medium-size)

High temperature Lead-Free reflow (suffix : A∗)

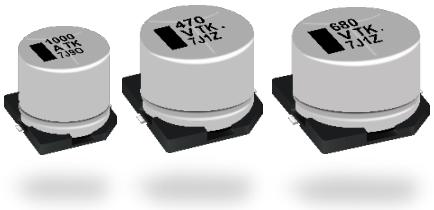

Features

- Endurance : 125 °C 2000 h
- Vibration-proof product (30G guaranteed) is available upon request
- AEC-Q200 compliant
- RoHS compliant

Specifications

Category temp. range	–40 °C to +125 °C									
Rated voltage range	10 V to 100 V									
Capacitance range	47 µF to 4700 µF									
Capacitance tolerance	±20 % (120 Hz / +20 °C)									
Leakage current	I ≤ 0.01 CV（µA）After 2 minutes									
Dissipation factor (tan δ)	Please see the attached characteristics list									
Characteristics at low temperature	Rated voltage (V)	10	16	25	35	50	63	80	100	(Impedance ratio at 120 Hz)
	Z (–25 °C) / Z (+20 °C)	3	2	2	2	2	2	2	2	
	Z (–40 °C) / Z (+20 °C)	6	4	4	3	3	3	3	3	
Endurance	After applying rated working voltage for 2000 hours at +125 °C ± 2 °C and then being stabilizedat +20 °C, capacitors shall meet the following limits.									
	Capacitance change	Within ±30 % of the initial value (Miniaturization product : Within ±35 %)								
	Dissipation factor (tan δ)	≤ 300 % of the initial limit (Miniaturization product : Within 350 %)								
	Leakage current	Within the initial limit								
Shelf life	After storage for 1000 hours at +125 °C ± 2 °C with no voltage applied and then being stabilized at +20 °C, capacitors shall meet the limits specified in endurance. (Capacitors are left at room temperature and humidity for 2 hours after the test. Then, apply the rated voltage for 30min with a series protection resistance of 1000 Ω ± 10 Ω. Measure electrical characteristics after discharging the capacitor.)									
Resistance to soldering heat	After reflow soldering and then being stabilized at +20 °C, capacitors shall meet the following limits.									
	Capacitance change	Within ±10 % of the initial value								
	Dissipation factor (tan δ)	Within the initial limit								
	Leakage current	Within the initial limit								

Frequency correction factor for ripple current

Frequency (Hz)	120	1 k	10 k	100 k to
Correction factor	0.75	0.9	0.95	1.00

Marking

Example : 10 V 1000 µF
Marking color : BLACK

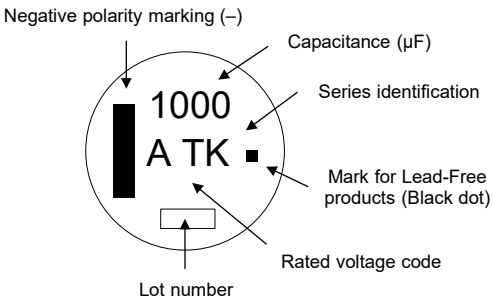

R.voltage code — Unit : V

A	10	H	50
C	16	J	63
E	25	K	80
V	35	2 A	100

Dimensions

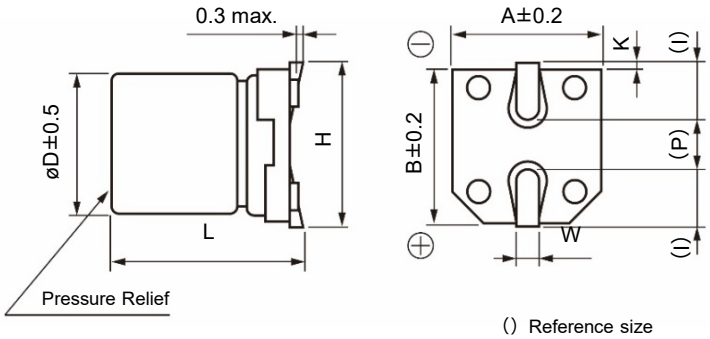

() Reference size

Unit : mm

Size code	øD	L	A, B	H	I	W	P	K
H13	12.5	13.5±0.5	13.5	15.0 max.	4.7	0.90±0.3	4.4	0.70±0.3
J16	16.0	16.5±0.5	17.0	19.0 max.	5.5	1.20±0.3	6.7	0.70±0.3
K16	18.0	16.5±0.5	19.0	21.0 max.	6.7	1.20±0.3	6.7	0.70±0.3

・The dimensions of the vibration-proof products, please refer to the page of the mounting specification.

Design and specifications are each subject to change without notice. Ask factory for the current technical specifications before purchase and/or use.
Should a safety concern arise regarding this product, please be sure to contact us immediately.

Explanation of part numbers

◇ Part number system

e.g.: EEETK1A102AQ

EEE	TK	1A	102	A	Q
Product classification	Series / Code	Rated voltage (V) / Code*	Capacitance (μF) / Code	Special code / Code	Tape width (mm) / Code

Series	Code
TK	TK

Rated voltage (V)	Code*
10	1A(A)
16	1C(C)
25	1E(E)
35	1V(V)
50	1H(H)
63	1J
80	1K(K)
100	2A

Capacitance (μF)	Code	Capacitance (μF)	Code
47	470	1000	102
100	101	1500	152
220	221	2200	222
330	331	3300	332
470	471	4700	472
680	681		

Special code	Code
High-temperature lead-free reflow	A
Miniaturized product	U

(Two codes can be combined)

Tape width (mm)	Code
33	Q
44	M

*: The text "0" or "1" is omitted when the part number exceeds 12 figures.
0J →J, 1A→A, 1C→C, 1E→E, 1V→V, 1H→H, 1K→K

Characteristics list

Endurance : 125 °C 2000 h

Rated voltage (V)	Capacitance (±20 %) (μF)	Case size (mm) øD	Case size (mm) L	Size code*1	Specification: Ripple current*2 (mA rms)	ESR (100 kHz) (Ω) +20 °C	ESR (100 kHz) (Ω) –40 °C	tan δ*3	Part No.	Reflow	Min. Packaging Q'ty (pcs) Taping
10	1000	12.5	13.5	H13	800	0.12	1.80	0.30	EEETK1A102AQ	(9)	200
	1500	12.5	13.5	(H13)	800	0.12	1.80	0.30	EEETKA152UAQ	(9)	200
	2200	16.0	16.5	J16	1100	0.08	1.20	0.32	EEETK1A222AM	(9)	125
	3300	16.0	16.5	(J16)	1100	0.08	1.20	0.34	EEETKA332UAM	(9)	125
		18.0	16.5	K16	1300	0.075	1.10	0.36	EEETK1A332AM	(9)	125
	4700	18.0	16.5	K16	1300	0.075	1.10	0.38	EEETK1A472AM	(9)	125
16	330	12.5	13.5	H13	800	0.12	1.80	0.23	EEETK1C331AQ	(9)	200
	470	12.5	13.5	H13	800	0.12	1.80	0.23	EEETK1C471AQ	(9)	200
	680	12.5	13.5	H13	800	0.12	1.80	0.23	EEETK1C681AQ	(9)	200
	1000	12.5	13.5	(H13)	800	0.12	1.80	0.23	EEETKC102UAQ	(9)	200
		16.0	16.5	J16	1100	0.08	1.20	0.25	EEETK1C102AM	(9)	125
	2200	16.0	16.5	(J16)	1100	0.08	1.20	0.27	EEETKC222UAM	(9)	125
		18.0	16.5	K16	1300	0.075	1.10	0.27	EEETK1C222AM	(9)	125
	3300	18.0	16.5	K16	1300	0.075	1.10	0.29	EEETK1C332AM	(9)	125
25	330	12.5	13.5	H13	800	0.12	1.80	0.18	EEETK1E331AQ	(9)	200
	470	12.5	13.5	H13	800	0.12	1.80	0.18	EEETK1E471AQ	(9)	200
	680	12.5	13.5	(H13)	800	0.12	1.80	0.18	EEETKE681UAQ	(9)	200
	680	16.0	16.5	J16	1100	0.08	1.20	0.18	EEETK1E681AM	(9)	125
	1000	16.0	16.5	(J16)	1100	0.08	1.20	0.18	EEETKE102UAM	(9)	125
		18.0	16.5	K16	1300	0.075	1.10	0.18	EEETK1E102AM	(9)	125
	2200	18.0	16.5	K16	1300	0.075	1.10	0.20	EEETK1E222AM	(9)	125
35	330	12.5	13.5	H13	800	0.12	1.80	0.16	EEETK1V331AQ	(9)	200
	470	12.5	13.5	(H13)	800	0.12	1.80	0.16	EEETKV471UAQ	(9)	200
		16.0	16.5	J16	1100	0.08	1.20	0.16	EEETK1V471AM	(9)	125
	680	16.0	16.5	(J16)	1100	0.08	1.20	0.16	EEETKV681UAM	(9)	125
		18.0	16.5	K16	1300	0.075	1.10	0.16	EEETK1V681AM	(9)	125
	1000	18.0	16.5	K16	1300	0.075	1.10	0.16	EEETK1V102AM	(9)	125

*1: Size code( ): Miniaturization product
*2: Ripple current (100 kHz / +125 °C)
*3: tan δ (120 Hz / +20 °C)
・Please refer to the page of "Reflow Profile" and "The Taping Dimensions".
・When requesting vibration-proof product, please put the last "V" instead to "Q" or "M"

Design and specifications are each subject to change without notice. Ask factory for the current technical specifications before purchase and/or use.
Should a safety concern arise regarding this product, please be sure to contact us immediately.

Characteristics list

Endurance : 125 °C 2000 h

Rated voltage (V)	Capacitance (±20 %) (μF)	Case size (mm)		Size code*1	Specification				Part No.	Reflow	Min. Packaging Q'ty (pcs)
		øD	L		Ripple current*2 (mA rms)	ESR (100 kHz) (Ω)		tan δ*3			Taping
						+20 °C	–40 °C				
50	220	12.5	13.5	H13	600	0.23	3.40	0.14	EEETK1H221AQ	(10)	200
	330	12.5	13.5	H13	600	0.23	3.40	0.14	EEETK1H331AQ	(10)	200
	470	16.0	16.5	J16	900	0.15	2.20	0.14	EEETK1H471AM	(10)	125
	680	16.0	16.5	(J16)	900	0.15	2.20	0.14	EEETKH681UAM	(10)	125
		18.0	16.5	K16	950	0.14	2.10	0.14	EEETK1H681AM	(10)	125
	1000	18.0	16.5	K16	950	0.14	2.10	0.14	EEETK1H102AM	(10)	125
63	100	12.5	13.5	H13	350	0.26	5.20	0.12	EEETK1J101AQ	(11)	200
	220	12.5	13.5	H13	350	0.26	5.20	0.12	EEETK1J221AQ	(11)	200
	330	16.0	16.5	J16	500	0.18	3.60	0.12	EEETK1J331AM	(11)	125
	470	16.0	16.5	J16	500	0.18	3.60	0.12	EEETK1J471AM	(11)	125
80	47	12.5	13.5	H13	250	0.42	8.40	0.12	EEETK1K470AQ	(11)	200
	100	12.5	13.5	(H13)	250	0.42	8.40	0.12	EEETKK101UAQ	(11)	200
		16.0	16.5	J16	350	0.30	6.00	0.12	EEETK1K101AM	(11)	125
	220	16.0	16.5	(J16)	350	0.30	6.00	0.12	EEETKK221UAM	(11)	125
		18.0	16.5	K16	400	0.28	5.60	0.12	EEETK1K221AM	(11)	125
	330	16.0	16.5	(J16)	350	0.30	6.00	0.12	EEETKK331UAM	(11)	125
		18.0	16.5	K16	400	0.28	5.60	0.12	EEETK1K331AM	(11)	125
	470	18.0	16.5	K16	400	0.28	5.60	0.12	EEETK1K471AM	(11)	125
100	47	12.5	13.5	H13	250	0.42	8.40	0.10	EEETK2A470AQ	(11)	200
	100	16.0	16.5	J16	350	0.30	6.00	0.10	EEETK2A101AM	(11)	125
	220	18.0	16.5	K16	400	0.28	5.60	0.10	EEETK2A221AM	(11)	125
	330	18.0	16.5	K16	400	0.28	5.60	0.10	EEETK2A331AM	(11)	125

*1: Size code( ): Miniaturization product
*2: Ripple current (100 kHz / +125 °C)
*3: tan δ (120 Hz / +20 °C)
・Please refer to the page of "Reflow Profile" and "The Taping Dimensions".
・When requesting vibration-proof product, please put the last “V” instead to “Q” or “M”

Panasonic
INDUSTRY

Aluminum Electrolytic Capacitors

Surface Mount Type

TP series

High temperature Lead-Free reflow (suffix : A∗)

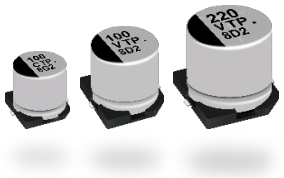

Features

- Endurance : 125 °C 3000 h (D8 size : 2000 h)
- Lower ESR at Low temperature after endurance
- Automotive
- Vibration-proof product (30G guaranteed) is available upon request
- AEC-Q200 compliant
- RoHS compliant

Specifications

Category temp. range	–40 °C to +125 °C				
Rated voltage range	10 V to 35 V				
Capacitance range	47 µF to 470 µF				
Capacitance tolerance	±20 % (120 Hz / +20 °C)				
Leakage current	I ≤ 0.01 CV (µA) After 2 minutes				
Dissipation factor (tan δ)	Please see the attached characteristics list				
Endurance	After the life test with DC rated working voltage at +125 °C ± 2 °C for 3000 hours (D8 : 2000 h) and then being stabilized at 20 °C, the capacitors shall meet the limits specified below.				
	Capacitance change	Within ±30 % of the initial value			
	Dissipation factor (tan δ)	≤ 300 % of the initial limit			
	Leakage current	Within the initial limit			
	ESR after endurance (Ω/100 kHz)	Size code	D8	F	G
		Initial (20 °C)	0.45	0.20	0.15
		After 2000 h (−40 °C)	40	4.5	3.5
Shelf life	After storage for 1000 hours at +125 °C ± 2 °C with no voltage applied and then being stabilized at +20 °C, capacitors shall meet the limits specified in endurance. (Capacitors are left at room temperature and humidity for 2 hours after the test. Then, apply the rated voltage for 30min with a series protection resistance of 1000 Ω ± 10 Ω. Measure electrical characteristics after discharging the capacitor.)				
Resistance to soldering heat	After reflow soldering and then being stabilized at +20 °C, capacitors shall meet the following limits.				
	Capacitance change	Within ±10 % of the initial value			
	Dissipation factor (tan δ)	Within the initial limit			
	Leakage current	Within the initial limit			

Frequency correction factor for ripple current

Frequency (Hz)	120	1 k	10 k	100 k to
Correction factor	0.65	0.85	0.95	1.00

Marking

Example : 10 V 220 µF
Marking color : BLACK

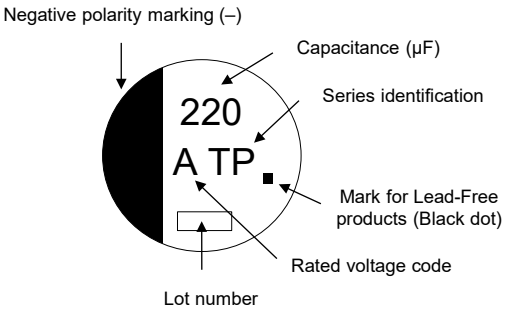

R.voltage code

Unit : V

A	10	E	25
C	16	V	35

Dimensions

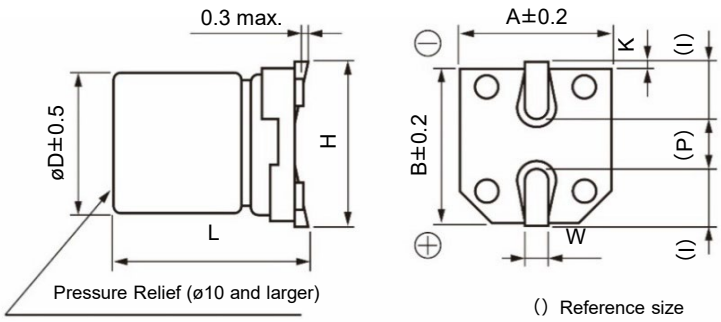

Unit : mm

Size code	øD	L	A, B	H	I	W	P	K
D8	6.3	7.7±0.3	6.6	7.8 max.	2.6	0.65±0.1	1.8	$0.35^{+0.15}_{-0.20}$
F	8.0	10.2±0.3	8.3	10.0 max.	3.4	0.90±0.2	3.1	0.70±0.2
G	10.0	10.2±0.3	10.3	12.0 max.	3.5	0.90±0.2	4.6	0.70±0.2

・The dimensions of the vibration-proof products, please refer to the page of the mounting specification.

Design and specifications are each subject to change without notice. Ask factory for the current technical specifications before purchase and/or use.
Should a safety concern arise regarding this product, please be sure to contact us immediately.

Explanation of part numbers

◇ Part number system

e.g.: EEETP1A221AV

EEE

Product classification

TP

Series	Code
TP	TP

1A

Rated voltage (V)	Code*
10	1A(A)
16	1C(C)
25	1E
35	1V(V)

221

Capacitance (μF)	Code	Capacitance (μF)	Code
47	470	330	331
100	101	470	471
220	221		

A

Special code	Code
High-temperature lead-free reflow	A
Minia-turized product	U
D8 size	X

(Two codes can be combined)

V

Tape width (mm)	Code
16, 24	P

Replace for the following configuration

Configuration	Code
Vibration proof	V

*: The text "0" or "1" is omitted when the part number exceeds 12 figures.
1A→A, 1C→C, 1V→V

Characteristics list

Endurance : 125 °C 3000 h (ø6.3×7.7 : 2000 h)

Rated voltage (V)	Capacitance (±20 %) (μF)	Case size (mm) øD	L Standard	L Vibration-proof	Size code*1	Specification Ripple current*2 (mA rms)	ESR (100 kHz) (Ω) +20 °C	ESR (100 kHz) (Ω) –40 °C	tan δ*3	Part No. Standard Product	Part No. Vibration-proof product	Reflow	Min.Packaging Q'ty (pcs) Taping
10	220	8.0	10.2	10.5	F	270	0.20	3.0	0.30	EEETP1A221AP	EEETP1A221AV	(8)	500
	330	8.0	10.2	10.5	(F)	270	0.20	3.0	0.30	EEETPA331UAP	EEETPA331UAV	(8)	500
		10.0	10.2	10.5	G	500	0.15	2.0	0.30	EEETP1A331AP	EEETP1A331AV	(8)	500
	470	10.0	10.2	10.5	G	500	0.15	2.0	0.30	EEETP1A471AP	EEETP1A471AV	(8)	500
16	100	6.3	7.7	8.0	D8	197	0.45	5.0	0.23	EEETPC101XAP	EEETPC101XAV	(8)	900
		8.0	10.2	10.5	F	270	0.20	3.0	0.23	EEETP1C101AP	EEETP1C101AV	(8)	500
	220	8.0	10.2	10.5	F	270	0.20	3.0	0.23	EEETP1C221AP	EEETP1C221AV	(8)	500
	330	10.0	10.2	10.5	G	500	0.15	2.0	0.23	EEETP1C331AP	EEETP1C331AV	(8)	500
	470	10.0	10.2	10.5	G	500	0.15	2.0	0.23	EEETP1C471AP	EEETP1C471AV	(8)	500
25	100	8.0	10.2	10.5	F	270	0.20	3.0	0.18	EEETP1E101AP	EEETP1E101AV	(8)	500
	220	10.0	10.2	10.5	G	500	0.15	2.0	0.18	EEETP1E221AP	EEETP1E221AV	(8)	500
	330	10.0	10.2	10.5	G	500	0.15	2.0	0.18	EEETP1E331AP	EEETP1E331AV	(8)	500
35	47	6.3	7.7	8.0	D8	197	0.45	5.0	0.16	EEETPV470XAP	EEETPV470XAV	(8)	900
		8.0	10.2	10.5	F	270	0.20	3.0	0.16	EEETP1V470AP	EEETP1V470AV	(8)	500
	100	8.0	10.2	10.5	F	270	0.20	3.0	0.16	EEETP1V101AP	EEETP1V101AV	(8)	500
	220	10.0	10.2	10.5	G	500	0.15	2.0	0.16	EEETP1V221AP	EEETP1V221AV	(8)	500

*1: Size code( ): Miniaturization product
*2: Ripple current (100 kHz / +125 °C)
*3: tan δ (120 Hz / +20 °C)
・Please refer to the page of "Reflow Profile" and "The Taping Dimensions".

Design and specifications are each subject to change without notice. Ask factory for the current technical specifications before purchase and/or use.
Should a safety concern arise regarding this product, please be sure to contact us immediately.

Panasonic INDUSTRY

⚠ Some part numbers are not a recommended product.
Not recommended for new design.

Aluminum Electrolytic Capacitors

Surface Mount Type

TP series (Medium-size)

High temperature Lead-Free reflow

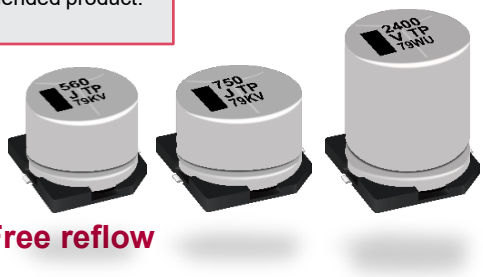

Features

- Endurance : 125 °C 3000 to 4000 h
- High ripple current (2 to 5 times as high as TK series)
- Low ESR (40 to 70 % lower than TK series)
- Large capacitance (Up to 80 % larger than TK series)
- Vibration-proof product (30G guaranteed) is available upon request
- AEC-Q200 compliant
- RoHS compliant

Specifications

Category temp. range	–55 °C to +125 °C			
Rated voltage range	25 V to 80 V			
Capacitance range	390 µF to 3300 µF			
Capacitance tolerance	±20 % (120 Hz / +20 °C)			
Leakage current	I ≤ 0.01 CV (µA) After 2 minutes			
Dissipation factor (tan δ)	Please see the attached characteristics list			
Characteristics at low temperature	Rated voltage (V)	25	35 to 80	(Impedance ratio at 120 Hz)
	Z (–25 °C) / Z (+20 °C)	2	2	
	Z (–40 °C) / Z (+20 °C)	4	3	
Endurance	After applying rated working voltage for 4000 hours at +125 °C ± 2 °C and then being stabilized at +20 °C, capacitors shall meet the following limits. (J16, K16 size : 3000 h)			
	Capacitance change	Within ±30 % of the initial value (35 V or less : Within ±35 %)		
	Dissipation factor (tan δ)	≤ 300 % of the initial limit		
	Leakage current	Within the initial limit		
Shelf life	After storage for 1000 hours at +125 °C ± 2 °C with no voltage applied and then being stabilized at +20 °C, capacitors shall meet the limits specified in endurance. (Capacitors are left at room temperature and humidity for 2 hours after the test. Then, apply the rated voltage for 30min with a series protection resistance of 1000 Ω ± 10 Ω. Measure electrical characteristics after discharging the capacitor.)			
Resistance to soldering heat	After reflow soldering and then being stabilized at +20 °C, capacitors shall meet the following limits.			
	Capacitance change	Within ±10 % of the initial value		
	Dissipation factor (tan δ)	Within the initial limit		
	Leakage current	Within the initial limit		

Frequency correction factor for ripple current

Frequency (Hz)	120	1 k	10 k	100 k to
Correction factor	0.75	0.90	0.95	1.00

Marking

Example : 25 V 1800 µF
Marking color : BLACK

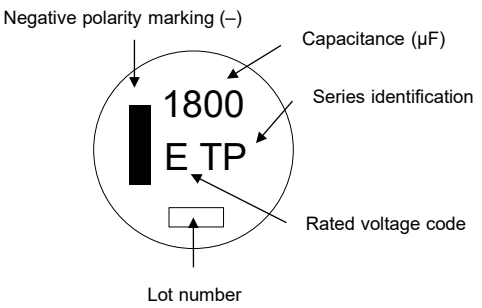

R.voltage code

Unit : V

E	25	J	63
V	35	70	70
H	50	K	80

Dimensions

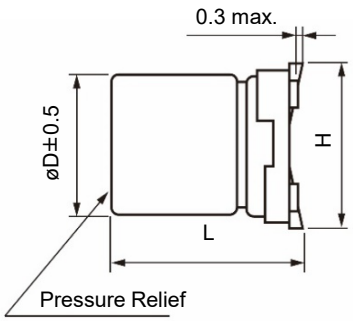

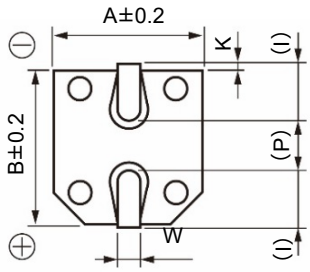

() Reference size

Unit : mm

Size code	øD	L	A, B	H	I	W	P	K
J16	16.0	16.5±0.5	17.0	19.0 max.	5.5	1.20±0.3	6.7	0.70±0.3
K16	18.0	16.5±0.5	19.0	21.0 max.	6.7	1.20±0.3	6.7	0.70±0.3
K21	18.0	21.5±0.5	19.0	21.0 max.	6.7	1.20±0.3	6.7	0.70±0.3

・The dimensions of the vibration-proof products, please refer to the page of the mounting specification.

Design and specifications are each subject to change without notice. Ask factory for the current technical specifications before purchase and/or use.
Should a safety concern arise regarding this product, please be sure to contact us immediately.

Explanation of part numbers

◇ Part number system

e.g.: EEETP1E182M

EEE

Product classification

TP

Series	Code
TP	TP

1E

Rated voltage (V)	Code
25	1E
35	1V
50	1H
63	1J
70	70
80	1K

182

Capacitance (μF)	Code	Capacitance (μF)	Code
390	391	820	821
470	471	1000	102
510	511	1300	132
560	561	1800	182
680	681	2700	272
750	751	3300	332

M

Tape width (mm)	Code
44	M

Replace for the following configuration

Configuration	Code
Vibration proof	V

Characteristics list

Endurance : 125 °C 4000 h (J16, K16 size : 3000 h)

Rated voltage (V)	Capacitance (±20 %) (μF)	Case size (mm) øD	Case size (mm) L Standard	Case size (mm) L Vibration-proof	Size code	Specification Ripple current*1 (mA rms)	Specification ESR*2 (Ω)	Specification tan δ*3	Part No. Standard Product	Part No. Vibration-proof product	Reflow	Min. Packaging Q'ty (pcs) Taping
25	1800	16.0	16.5	16.8	J16	2400	0.047	0.18	EEETP1E182M	EEETP1E182V	(9)	125
	2700	18.0	16.5	16.8	K16	2600	0.045	0.20	EEETP1E272M	EEETP1E272V	(9)	125
NRFND	3300	18.0	21.5	21.8	K21	3250	0.032	0.22	EEETP1E332M	EEETP1E332V	(9)	75
35	1300	16.0	16.5	16.8	J16	2400	0.047	0.16	EEETP1V132M	EEETP1V132V	(9)	125
	1800	18.0	16.5	16.8	K16	2600	0.045	0.16	EEETP1V182M	EEETP1V182V	(9)	125
NRFND	2400	18.0	21.5	21.8	K21	3250	0.032	0.18	EEETP1V242M	EEETP1V242V	(9)	75
50	750	16.0	16.5	16.8	J16	2000	0.080	0.14	EEETP1H751M	EEETP1H751V	(10)	125
	1000	18.0	16.5	16.8	K16	2100	0.078	0.14	EEETP1H102M	EEETP1H102V	(10)	125
NRFND	1300	18.0	21.5	21.8	K21	2900	0.060	0.14	EEETP1H132M	EEETP1H132V	(10)	75
63	560	16.0	16.5	16.8	J16	1900	0.100	0.12	EEETP1J561M	EEETP1J561V	(11)	125
	750	18.0	16.5	16.8	K16	2000	0.095	0.12	EEETP1J751M	EEETP1J751V	(11)	125
NRFND	1000	18.0	21.5	21.8	K21	2600	0.068	0.12	EEETP1J102M	EEETP1J102V	(11)	75
70	470	16.0	16.5	16.8	J16	1900	0.100	0.12	EEETP70471M	EEETP70471V	(11)	125
	680	18.0	16.5	16.8	K16	2000	0.095	0.12	EEETP70681M	EEETP70681V	(11)	125
NRFND	820	18.0	21.5	21.8	K21	2600	0.068	0.12	EEETP70821M	EEETP70821V	(11)	75
80	390	16.0	16.5	16.8	J16	1900	0.100	0.12	EEETP1K391M	EEETP1K391V	(11)	125
	510	18.0	16.5	16.8	K16	2000	0.095	0.12	EEETP1K511M	EEETP1K511V	(11)	125
NRFND	680	18.0	21.5	21.8	K21	2600	0.068	0.12	EEETP1K681M	EEETP1K681V	(11)	75

*1: Ripple current (100 kHz / +125 °C)
*2: ESR (100 kHz / +20 °C)
*3: tan δ (120 Hz / +20 °C)
・Please refer to the page of "Reflow Profile" and "The Taping Dimensions".

NRFND Not recommended for new design

Explanation of part numbers

◇ Part number system

e.g.: EEETC1A221P

EEE	TC	1A	221	-	P
Product classification	Series / Code	Rated voltage (V) / Code	Capacitance (μF) / Code	Special code / Code	Tape width (mm) / Code

Series	Code
TC	TC

Rated voltage (V)	Code
10	1A
16	1C
25	1E
35	1V

Capacitance (μF)	Code	Capacitance (μF)	Code
47	470	330	331
100	101	470	471
220	221		

Special code	Code
D8 size	X
Others	-

Tape width (mm)	Code
16, 24	P

Replace for the following configuration

Configuration	Code
Vibration proof	V

Characteristics list

Endurance : 125 °C 3000 h (D8 size : 2000 h)

Rated voltage (V)	Capacitance (±20 %) (μF)	Case size (mm) øD	Case size (mm) L Standard	Case size (mm) L Vibration-proof	Size code	Specification Ripple current*1 (mA rms)	Specification ESR (100 kHz) (Ω) +20 °C	Specification ESR (100 kHz) (Ω) –40 °C	Specification tan δ*2	Part No. Standard product	Part No. Vibration-proof product	Reflow	Min.Packaging Q'ty (pcs) Taping
10	220	8.0	10.2	10.5	F	410	0.20	3.0	0.30	EEETC1A221P	EEETC1A221V	(8)	500
	330	10.0	10.2	10.5	G	750	0.15	2.0	0.30	EEETC1A331P	EEETC1A331V	(8)	500
	470	10.0	10.2	10.5	G	750	0.15	2.0	0.30	EEETC1A471P	EEETC1A471V	(8)	500
16	100	6.3	7.7	8.0	D8	300	0.45	5.0	0.23	EEETC1C101XP	EEETC1C101XV	(8)	900
		8.0	10.2	10.5	F	410	0.20	3.0	0.23	EEETC1C101P	EEETC1C101V	(8)	500
	220	8.0	10.2	10.5	F	410	0.20	3.0	0.23	EEETC1C221P	EEETC1C221V	(8)	500
	330	10.0	10.2	10.5	G	750	0.15	2.0	0.23	EEETC1C331P	EEETC1C331V	(8)	500
	470	10.0	10.2	10.5	G	750	0.15	2.0	0.23	EEETC1C471P	EEETC1C471V	(8)	500
25	100	8.0	10.2	10.5	F	410	0.20	3.0	0.18	EEETC1E101P	EEETC1E101V	(8)	500
	220	10.0	10.2	10.5	G	750	0.15	2.0	0.18	EEETC1E221P	EEETC1E221V	(8)	500
	330	10.0	10.2	10.5	G	750	0.15	2.0	0.18	EEETC1E331P	EEETC1E331V	(8)	500
35	47	6.3	7.7	8.0	D8	300	0.45	5.0	0.16	EEETC1V470XP	EEETC1V470XV	(8)	900
		8.0	10.2	10.5	F	410	0.20	3.0	0.16	EEETC1V470P	EEETC1V470V	(8)	500
	100	8.0	10.2	10.5	F	410	0.20	3.0	0.16	EEETC1V101P	EEETC1V101V	(8)	500
	220	10.0	10.2	10.5	G	750	0.15	2.0	0.16	EEETC1V221P	EEETC1V221V	(8)	500

*1: Ripple current (100 kHz / +125 °C)
*2: tan δ (120 Hz / +20 °C)
・Please refer to the page of "Reflow Profile" and "The Taping Dimensions".

Design and specifications are each subject to change without notice. Ask factory for the current technical specifications before purchase and/or use.
Should a safety concern arise regarding this product, please be sure to contact us immediately.

Panasonic
INDUSTRY

Aluminum Electrolytic Capacitors

Surface Mount Type

TCU series

High temperature Lead-Free reflow

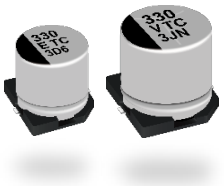

Features

- Endurance : 125 °C 3000 h
- Miniaturization (20 % to 40 % less than TP series)
- Added ESR specification after the endurance test
- Vibration-proof product (30G guaranteed) is available upon request
- AEC-Q200 compliant
- RoHS compliant

Specifications

Category temp. range	–40 °C to +125 °C				
Rated voltage range	10 V to 35 V				
Capacitance range	220 μF to 680 μF				
Capacitance tolerance	±20 % (120 Hz / +20 °C)				
Leakage current	I ≤ 0.01 CV (μA) After 2 minutes				
Dissipation factor (tan δ)	Please see the attached characteristics list				
Endurance	After applying rated working voltage for 3000 hours at +125 °C ± 2 °C and then being stabilized at +20 °C, capacitors shall meet the following limits.				
	Capacitance change	Within ±30 % of the initial value			
	Dissipation factor (tan δ)	≤ 300 % of the initial limit			
	Leakage current	Within the initial limit			
	ESR after endurance (Ω/100kHz)	Size code	F	G	
		Initial (20 °C)	0.20	0.15	
		After 2000 h (−40 °C)	9	7	
Shelf life	After storage for 1000 hours at +125 °C ± 2 °C with no voltage applied and then being stabilized at +20 °C, capacitors shall meet the limits specified in endurance. (Capacitors are left at room temperature and humidity for 2 hours after the test. Then, apply the rated voltage for 30min with a series protection resistance of 1000 Ω ± 10 Ω. Measure electrical characteristics after discharging the capacitor.)				
Resistance to soldering heat	After reflow soldering and then being stabilized at +20 °C, capacitors shall meet the following limits.				
	Capacitance change	Within ±10 % of the initial value			
	Dissipation factor (tan δ)	Within the initial limit			
	Leakage current	Within the initial limit			

Frequency correction factor for ripple current

Frequency (Hz)	120	1 k	10 k	100 k to
Correction factor	0.65	0.85	0.95	1.00

Marking

Example : 10 V 330 μF
Marking color : BLACK

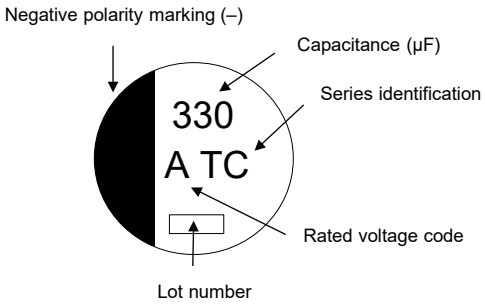

R.voltage code

A	10	E	25
C	16	V	35

Unit : V

Dimensions

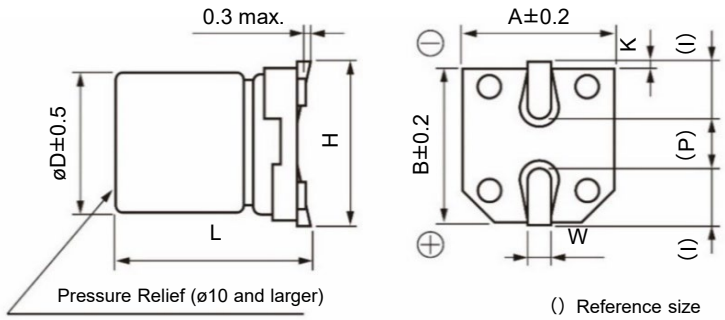

Unit : mm

Size code	øD	L	A, B	H	I	W	P	K
F	8.0	10.2±0.3	8.3	10.0 max.	3.4	0.90±0.2	3.1	0.70±0.2
G	10.0	10.2±0.3	10.3	12.0 max.	3.5	0.90±0.2	4.6	0.70±0.2

・The dimensions of the vibration-proof products, please refer to the page of the mounting specification.

Design and specifications are each subject to change without notice. Ask factory for the current technical specifications before purchase and/or use.
Should a safety concern arise regarding this product, please be sure to contact us immediately.

Explanation of part numbers

◇ Part number system

e.g.: EEETC1A331UP

EEE

Product classification

TC

Series	Code
TC	TC

1A

Rated voltage (V)	Code
10	1A
16	1C
25	1E
35	1V

331

Capacitance (μF)	Code	Capacitance (μF)	Code
220	221	470	471
330	331	560	561
390	391	680	681

U

Special code	Code
Minia-turized product	U

P

Tape width (mm)	Code
16, 24	P

Replace for the following configuration

Configuration	Code
Vibration proof	V

Characteristics list

Endurance : 125 °C 3000 h

Rated voltage (V)	Capacitance (±20 %) (μF)	Case size (mm)			Size code	Specification				Part No.		Reflow	Min.Packaging Q'ty (pcs)
		øD	L			Ripple current*1 (mA rms)	ESR (100 kHz) (Ω)		tan δ*2	Standard Product	Vibration-proof product		Taping
			Standard	Vibration-proof			+20 °C	–40 °C					
10	330	8.0	10.2	10.5	F	410	0.20	3.0	0.30	EEETC1A331UP	EEETC1A331UV	(8)	500
	470	8.0	10.2	10.5	F	410	0.20	3.0	0.30	EEETC1A471UP	EEETC1A471UV	(8)	500
	560	8.0	10.2	10.5	F	410	0.20	3.0	0.30	EEETC1A561UP	EEETC1A561UV	(8)	500
	680	10.0	10.2	10.5	G	750	0.15	2.0	0.30	EEETC1A681UP	EEETC1A681UV	(8)	500
16	330	8.0	10.2	10.5	F	410	0.20	3.0	0.23	EEETC1C331UP	EEETC1C331UV	(8)	500
	390	8.0	10.2	10.5	F	410	0.20	3.0	0.23	EEETC1C391UP	EEETC1C391UV	(8)	500
	680	10.0	10.2	10.5	G	750	0.15	2.0	0.23	EEETC1C681UP	EEETC1C681UV	(8)	500
25	220	8.0	10.2	10.5	F	410	0.20	3.0	0.18	EEETC1E221UP	EEETC1E221UV	(8)	500
	330	8.0	10.2	10.5	F	410	0.20	3.0	0.18	EEETC1E331UP	EEETC1E331UV	(8)	500
	470	10.0	10.2	10.5	G	750	0.15	2.0	0.18	EEETC1E471UP	EEETC1E471UV	(8)	500
35	220	8.0	10.2	10.5	F	410	0.20	3.0	0.16	EEETC1V221UP	EEETC1V221UV	(8)	500
	330	10.0	10.2	10.5	G	750	0.15	2.0	0.16	EEETC1V331UP	EEETC1V331UV	(8)	500
	390	10.0	10.2	10.5	G	750	0.15	2.0	0.16	EEETC1V391UP	EEETC1V391UV	(8)	500

*1: Ripple current (100 kHz / +125 °C)
*2: tan δ (120 Hz / +20 °C)
・Please refer to the page of "Reflow Profile" and "The Taping Dimensions".

Design and specifications are each subject to change without notice. Ask factory for the current technical specifications before purchase and/or use.
Should a safety concern arise regarding this product, please be sure to contact us immediately.

Panasonic
INDUSTRY

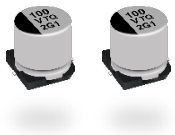

Aluminum Electrolytic Capacitors

Surface Mount Type

TQ series

High temperature Lead-Free reflow (suffix : A✱)

Features

- Endurance : 125 °C 2000 h
- 1 size smaller and same performance compare with V-TK series
- Low ESR (85 % low ESR in low temperature after endurance compare with V-TP series)
- Vibration-proof product (30G guaranteed) is available upon request
- AEC-Q200 compliant
- RoHS compliant

Specifications

Category temp. range	–40 °C to +125 °C			
Rated voltage range	35 V			
Capacitance range	47 µF to 100 µF			
Capacitance tolerance	±20 % (120 Hz / +20°C)			
Leakage current	I ≤ 0.01 CV（µA）After 2 minutes			
Dissipation factor (tan δ)	Please see the attached characteristics list			
Endurance	After the life test with DC rated working voltage at +125 °C ± 2 °C for 2000 hours, and then being stabilized at 20 °C, the capacitors shall meet the limits specified below.			
	Capacitance change	Within ±30 % of the initial value		
	Dissipation factor (tan δ)	≤ 300 % of the initial limit		
	Leakage current	Within the initial limit		
	ESR after endurance (Ω/100 kHz)	Size code	D8	
		Initial (20 °C)	0.30	
		After 2000 h (−40 °C)	6	
Shelf life	After storage for 1000 hours at +125 °C ± 2 °C with no voltage applied and then being stabilized at +20 °C, capacitors shall meet the limits specified in endurance. (Capacitors are left at room temperature and humidity for 2 hours after the test. Then, apply the rated voltage for 30min with a series protection resistance of 1000 Ω ± 10 Ω. Measure electrical characteristics after discharging the capacitor.)			
Resistance to soldering heat	After reflow soldering and then being stabilized at +20 °C, capacitors shall meet the following limits.			
	Capacitance change	Within ±10 % of the initial value		
	Dissipation factor (tan δ)	Within the initial limit		
	Leakage current	Within the initial limit		

Frequency correction factor for ripple current

Frequency (Hz)	120	1 k	10 k	100 k to
Correction factor	0.65	0.85	0.95	1.00

Marking

Example : 35 V 47 µF
Marking color : BLACK

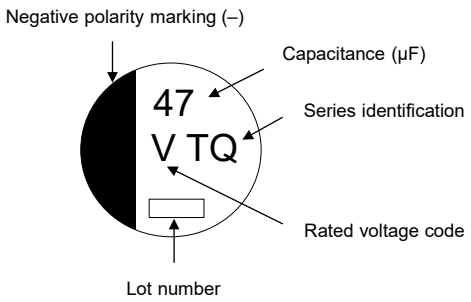

R.voltage code	Unit : V
V	35

Dimensions

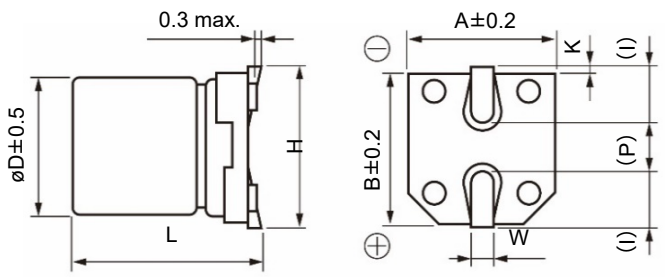

() Reference size

Unit : mm

Size code	øD	L	A, B	H	I	W	P	K
D8	6.3	7.7±0.3	6.6	7.8 max.	2.6	0.65±0.1	1.8	$0.35^{+0.15}_{-0.20}$

・The dimensions of the vibration-proof products, please refer to the page of the mounting specification.

Design and specifications are each subject to change without notice. Ask factory for the current technical specifications before purchase and/or use.
Should a safety concern arise regarding this product, please be sure to contact us immediately.

Explanation of part numbers

◇ Part number system

e.g.: EEETQV470XAP

EEE

Product classification

TQ

Series	Code
TQ	TQ

V

Rated voltage (V)	Code
35	V

470

Capacitance (μF)	Code
47	470
100	101

XA

Special code	Code
High-temperature lead-free reflow	A
D8 size	X

(Two codes can be combined)

P

Tape width (mm)	Code
16, 24	P

Replace for the following configuration

Configuration	Code
Vibration proof	V

Characteristics list

Endurance : 125 °C 2000 h

Rated voltage (V)	Capacitance (±20 %) (μF)	Case size (mm)			Size code	Specification			Part No.		Reflow	Min. Packaging Q'ty(pcs)
		øD	L			Ripple current*1 (mA rms)	ESR*2 (Ω)	tan δ*3	Standard product	Vibration-proof product		Taping
			Standard	Vibration-proof								
35	47	6.3	7.7	8.0	D8	197	0.30	0.16	EEETQV470XAP	EEETQV470XAV	(5)	900
	100	6.3	7.7	8.0	D8	197	0.30	0.16	EEETQV101XAP	EEETQV101XAV	(5)	900

*1: Ripple current (100 kHz / +125 °C)
*2: ESR (100 kHz / +20 °C)
*3: tan δ (120 Hz / +20 °C)
・Please refer to the page of "Reflow Profile" and "The Taping Dimensions".

Design and specifications are each subject to change without notice. Ask factory for the current technical specifications before purchase and/or use.
Should a safety concern arise regarding this product, please be sure to contact us immediately.

Safty Precautions

When using our products, no matter what sort of equipment they might be used for,
be sure to confirm the applications and environmental conditions with our specifications in advance.

Panasonic INDUSTRY

Panasonic Industry Co., Ltd.
Device Solutions Business Division

1006 Kadoma, Kadoma City, Osaka
571-8506 Japan

© Panasonic Industry

Unauthorized duplication of this catalog is strictly forbidden.
The contents of catalog are as of April 2026.