Modular Jack

Current Rate: 1.5A
Voltage Rate: 125V
Dielectric Voltage: 1000V AC for one minute
Insulation Resistance: 500MΩ Min.
Contact Resistance: 30mΩ Max.
Material Contact: Copper Alloy, Gold / Tin
Material Insulator: PBT or FR52, UL94V-0
Operating Temperature: -40°C~+85°C

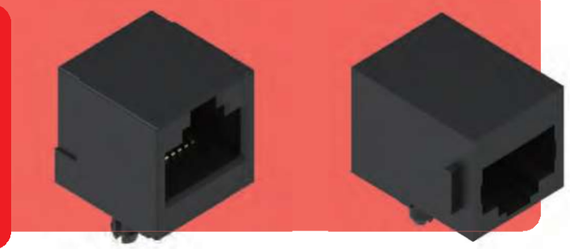

Modular Jack Side Entry H=16.4 W=15.4

Part No.: Z210NXX-XX

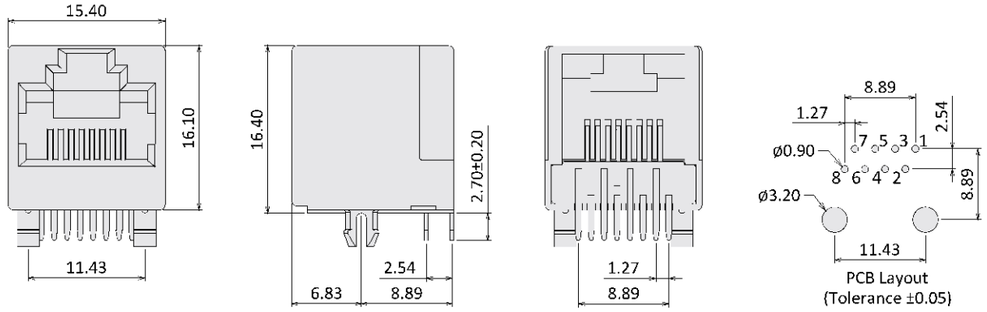

Code	Position	Contact
88	8P	8C

Modular Jack Side Entry H=15.7 W=20.5

Part No.: Z240XXX-XXX

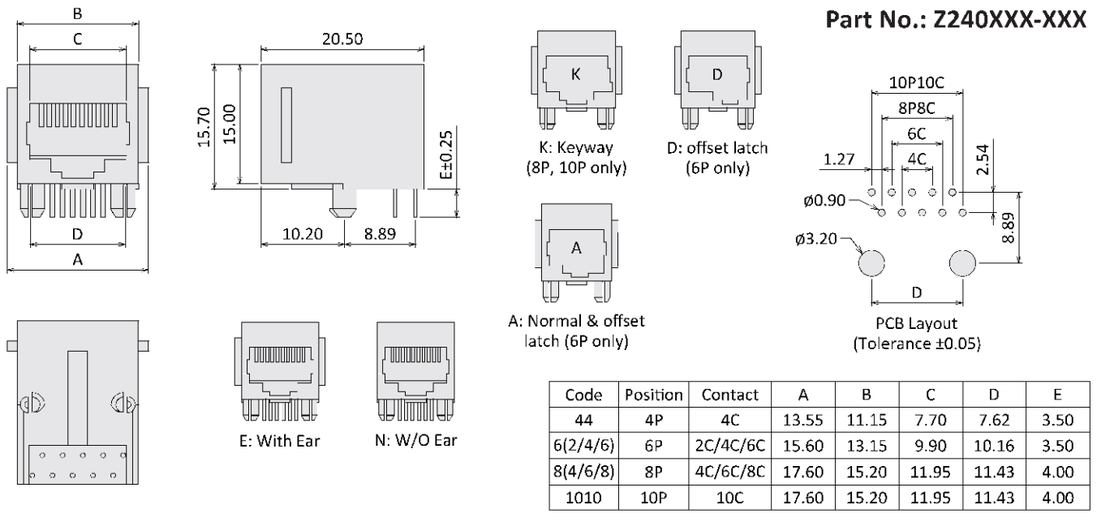

Code	Position	Contact	A	B	C	D	E
44	4P	4C	13.55	11.15	7.70	7.62	3.50
6(2/4/6)	6P	2C/4C/6C	15.60	13.15	9.90	10.16	3.50
8(4/6/8)	8P	4C/6C/8C	17.60	15.20	11.95	11.43	4.00
1010	10P	10C	17.60	15.20	11.95	11.43	4.00

Order Information

Z XXX X XX - XX X

- Series No. 210 / 240
- N: W/O Ear, E: With Ear
- G0: Gold Flash, G1: Gold 3u", G2: Gold 6u", G3: Gold 10u", G4: Gold 15u", G5: Gold 30u"
- See Table (Code)
- Blank: None, K: Keyway, D: offset Latch, A: Normal offset Latch (240 only)

Modular Jack

Current Rate: 1.5A
Voltage Rate: 125V
Dielectric Voltage: 1000V AC for one minute
Insulation Resistance: 500MΩ Min.
Contact Resistance: 30mΩ Max.
Material Contact: Copper Alloy, Gold / Tin
Material Insulator: PBT or NY 9T, UL94V-0
Operating Temperature: -40°C~+85°C

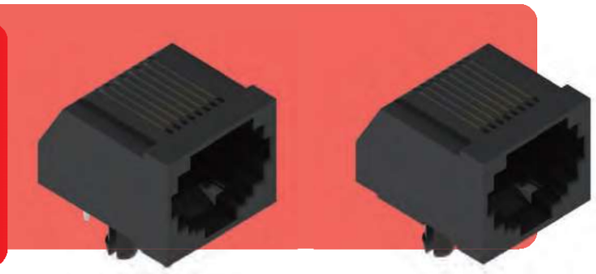

Modular Jack Side Entry H=12.6 W=18.1

Part No.: Z253XXX-XX

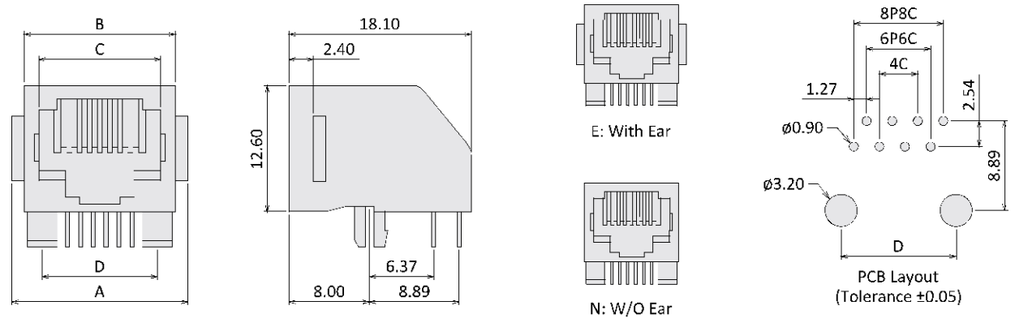

Code	Position	Contact	A	B	C	D
6(4/6)	6P	4C/6C	15.75	13.20	9.90	10.16
88	8P	8C	17.75	15.20	11.93	11.43

Modular Jack Side Entry H=12.5 W=18.1

Part No.: Z254XXX-88

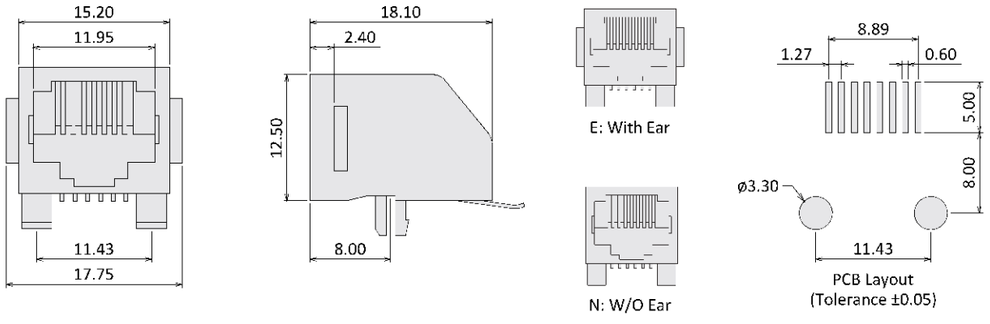

Code	Position	Contact
88	8P	8C

Order Information

Z XXX X XX - XX

- Series No. 253 / 254
- N: W/O Ear, E: With Ear
- G0: Gold Flash, G1: Gold 3u", G2: Gold 6u", G3: Gold 10u", G4: Gold 15u", G5: Gold 30u"
- See Table (Code)