Transfer or duplication of this document as well as the utilization or communication of its contents are prohibited unless explicit authorization is granted. Violations will be liable for compensation. All rights reserved for patent, utility model or designs registrations. 非给予明确授权，否则禁止转让、复制、利用、交流本文件的内容。侵犯者将负赔偿责任。本公司保留对涉及发明、实用新型和外观专利的所有权利。

未注公差/General tolerances(mm)													
0 ~ 3	>3 ~ 6	>6 ~ 10	>10 ~ 18	>18 ~ 30	>30 ~ 50	>50 ~ 80	>80 ~ 120	>120 ~ 180	>180 ~ 250	>250 ~ 315	>315 ~ 400	>400 ~ 500	>500
±0.12	±0.18	±0.22	±0.26	±0.31	±0.37	±0.57	±0.80	±0.93	±1.05	±1.15	±1.60	±2.20	±2.50

0.1/10 ∠ ±2°



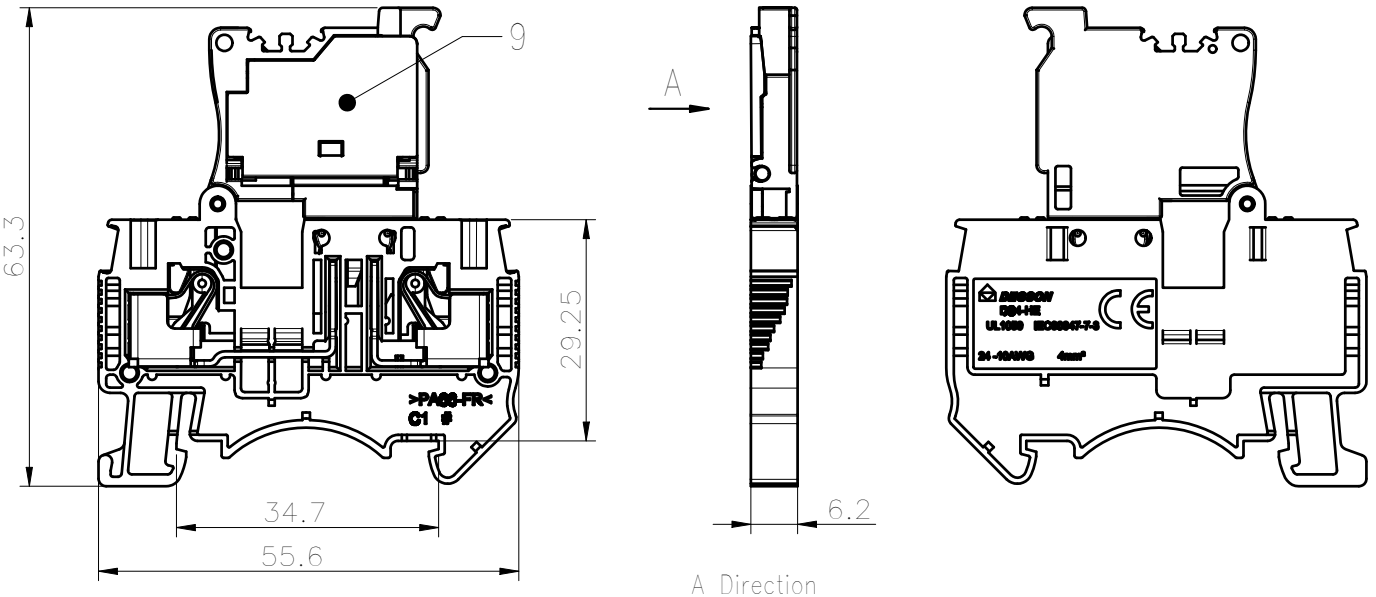

A Direction
(W/O Cove)

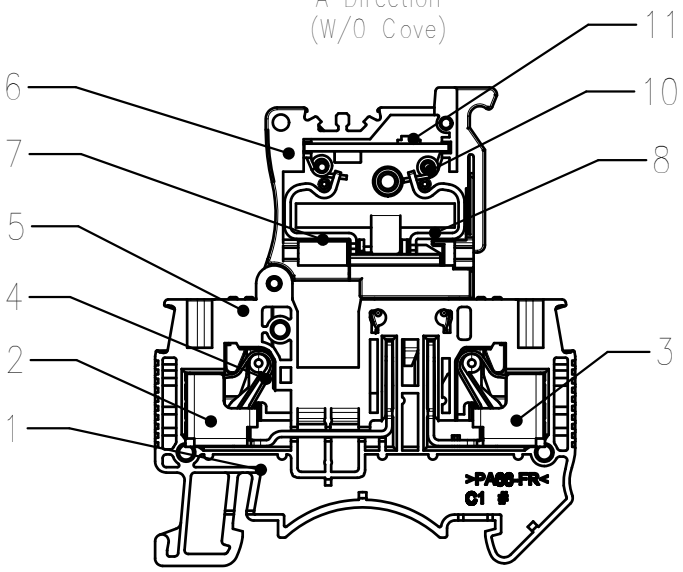

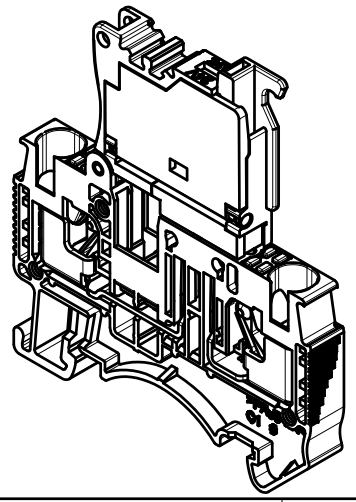

ITEM	NAME OF PART	MATERIAL	NOTES
11	DS4-HE 24V PCB	/	/
10	Torsional spring	bronze	/
9	Cover	PA66	UL94V-0
8	Current carrier 4	Copper alloy	Sn plated
7	Current carrier 3	Copper alloy	Sn plated
6	Fuse Housing	PA66	UL94V-0
5	Button	PA66+GF%	UL94V-0
4	Spring	Stainless steel	/
3	Current carrier 2	Copper alloy	Sn plated
2	Current carrier 1	Copper alloy	Sn plated
1	Housing	PA66	UL94V-0

UL 标准/UL Standard:	B	C	D
额定电压/电流/Rated Voltage(V)/Current(A)	/	/	/
IEC 标准/IEC Standard:			
过压类别/Overvoltage Category/污染等级/Pollution Degree	Ⅲ/3	Ⅲ/2	Ⅱ/2
额定电压/电流/Rated Voltage(V)/Current(A)	24/6.3	/	/
额定脉冲电压(KV)/Rate Impulse Voltage(KV)	/	/	/
线径范围(硬线和软线)/Wire Range(rigid and flexible)(AWG/mm²)	24~10 / 0.2~4,6(Sol)		
间距/Pitch(mm)/线数范围/Poles	6.2/01P		
剥线长度/Stripping length(mm)	11~13		
使用温度范围/Operating temperature(°C)	-40~+105		
符合RoHS环保要求/Conform to RoHS	Yes		

REV	ECN	DESCRIPTION	DRFT	DATE
00	/	/	Wang LX	2022.04.15

DEGSON

APPD:	Li GL	2022.04.25
CHKD:	Ma EK	2022.04.25
DRFT:	Wang LX	2022.04.15

A4 (mm/inch)

MATERIAL: / SURFACE: /

MAT NO./REV: / MAT STATUS: /

NAME: DS4-HE-LD24-01P-1Y-00A(H)

DRAWING NO.	TYPE	DRAWING STATUS	SCALE	SHEET
/	COMPONENT DRAWING	/	1:1	1/1