未注公差/General tolerances(mm)														
0~3	>3~6	>6~10	>10~18	>18~30	>30~50	>50~80	>80~120	>120~180	>180~250	>250~315	>315~400	>400~500	>500	0.1/10
±0.12	±0.18	±0.22	±0.26	±0.31	±0.37	±0.57	±0.80	±0.93	±1.05	±1.15	±1.60	±2.20	±2.50	±2°

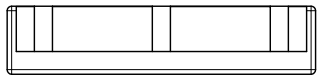

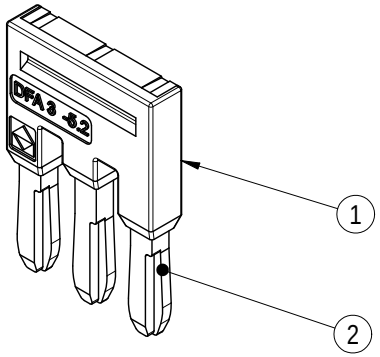

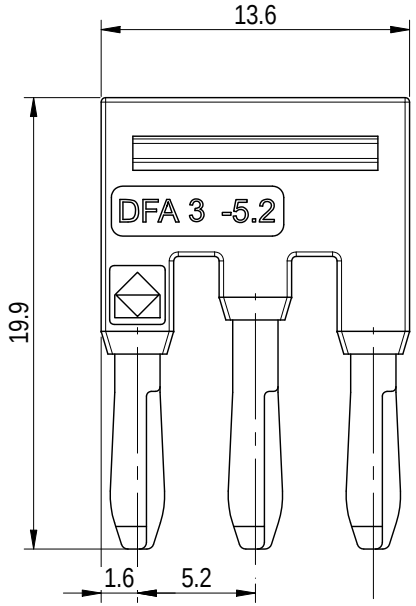

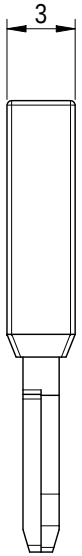

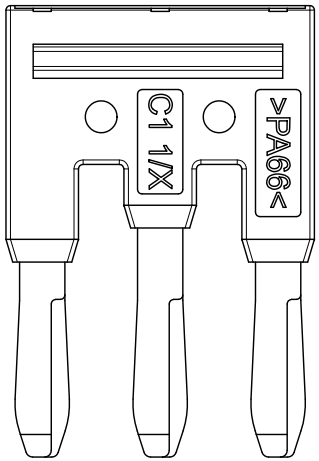

ITEM	NAME OF PART	MATERIAL	NOTES
2	Current_carrier	Copper	Sn_plated
1	Housing	PA66	UL94V-0

REV	ECN	DESCRIPTION	DRFT	DATE
00		NEW DRAWING	郝路遥	2025.06.17

DEGSON

APPD:	李根劳	2025.06.17
CHKD:	马恩开	2025.06.17
DRFT:	郝路遥	2025.06.17

A4 mm (inch)

MATERIAL: | SURFACE/COLOR:

MAT NO./REV: 11060001081-1 / 00 | MAT STATUS: 批量

NAME: DFA3-5.2-1Y-00Z(H)

DRAWING NO.	TYPE	DRAWING STATUS	SCALE	SHEET
200358011	CUSTOMER DRAWING	work	3:1	1/1

Transfer or duplication of this document as well as the utilization or communication of its contents are prohibited unless explicit authorization is granted. Violations will be liable for compensation. All rights reserved for patent, utility model or designs registrations. 除非扬子明确授权，否则禁止转让、复制、利用、交流本文件的内容，侵犯者将为赔偿责任。本公司保留对涉及发明、实用新型和外观专利的所有权利。