Alle Rechte vorbehalten/ *All rights reserved*

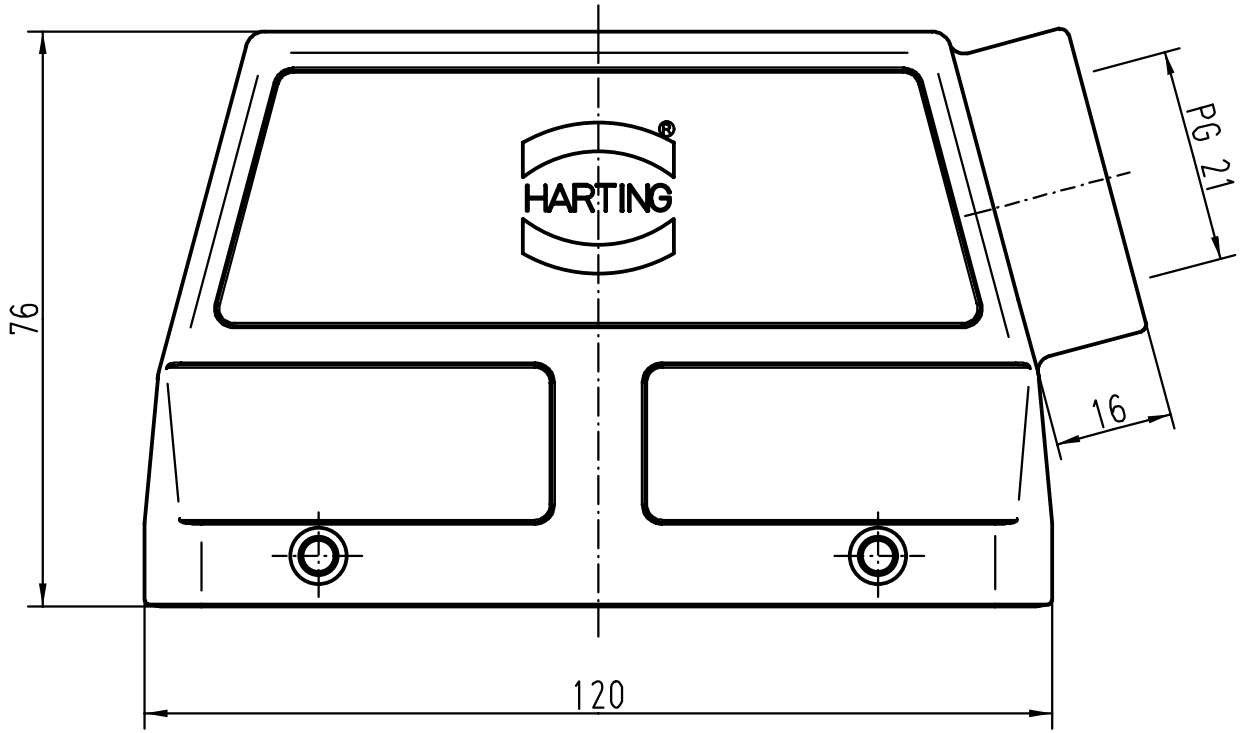


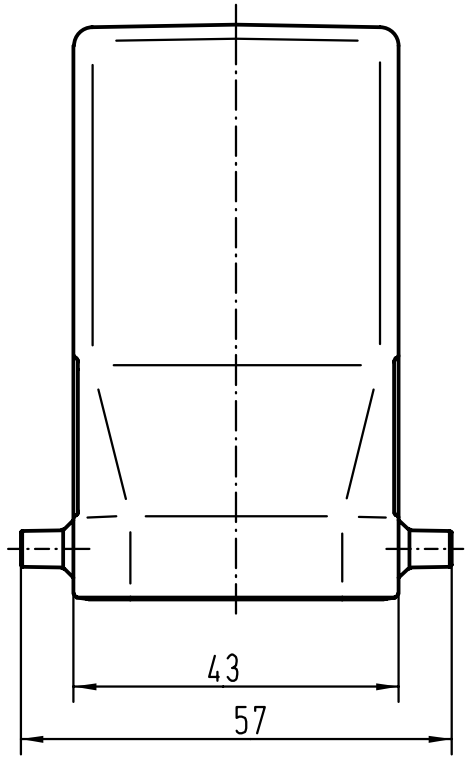


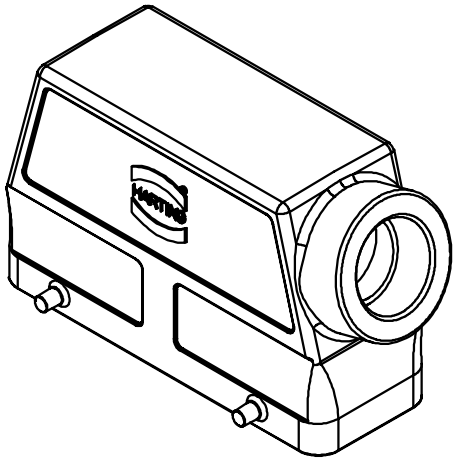

| | | | | | | |
|---|---|---|---|---|---|---|
| All Dimensions in mm<br>Original Size DIN A 4 | | | Techn. Character. | | | Nicht tolerierte Masse/ *Free size tolerances* |
| | | | | Dat. | Name | Massstab/*Scale* |
| | | | Detail. | 10.06.99 | Gä | 1:1 |
| | | | Insp. | | Sdt | |
| | | | Stand. | | | |
| | | | HARTING KGaA<br>D-32339 ESPELKAMP | | | Han 24B-gs-21<br>Tüllengehäuse/<br>*hoods side-entry* |
| 26117 | | | | | | TB 09 30 024 0520 |
| Mod. | Dat. | Name | | | | Sub. TB 09 30 0.. 052. v. 28.01.93 |

Blatt/ *page* /