# RS232 -> DCE Device

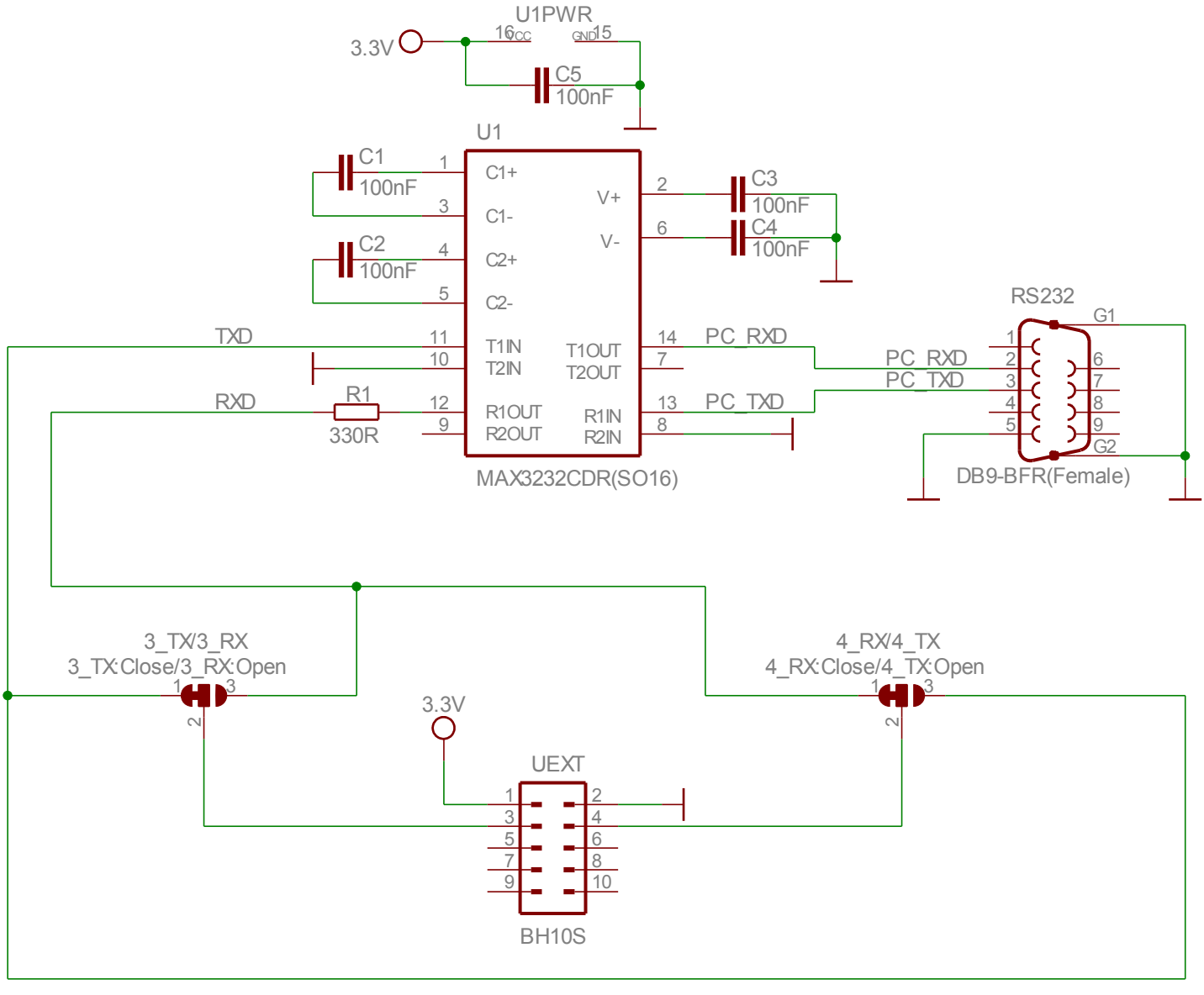


MOD-RS232_Rev_A

OLIMEX LTD BULGARIA

http://www.olimex.com