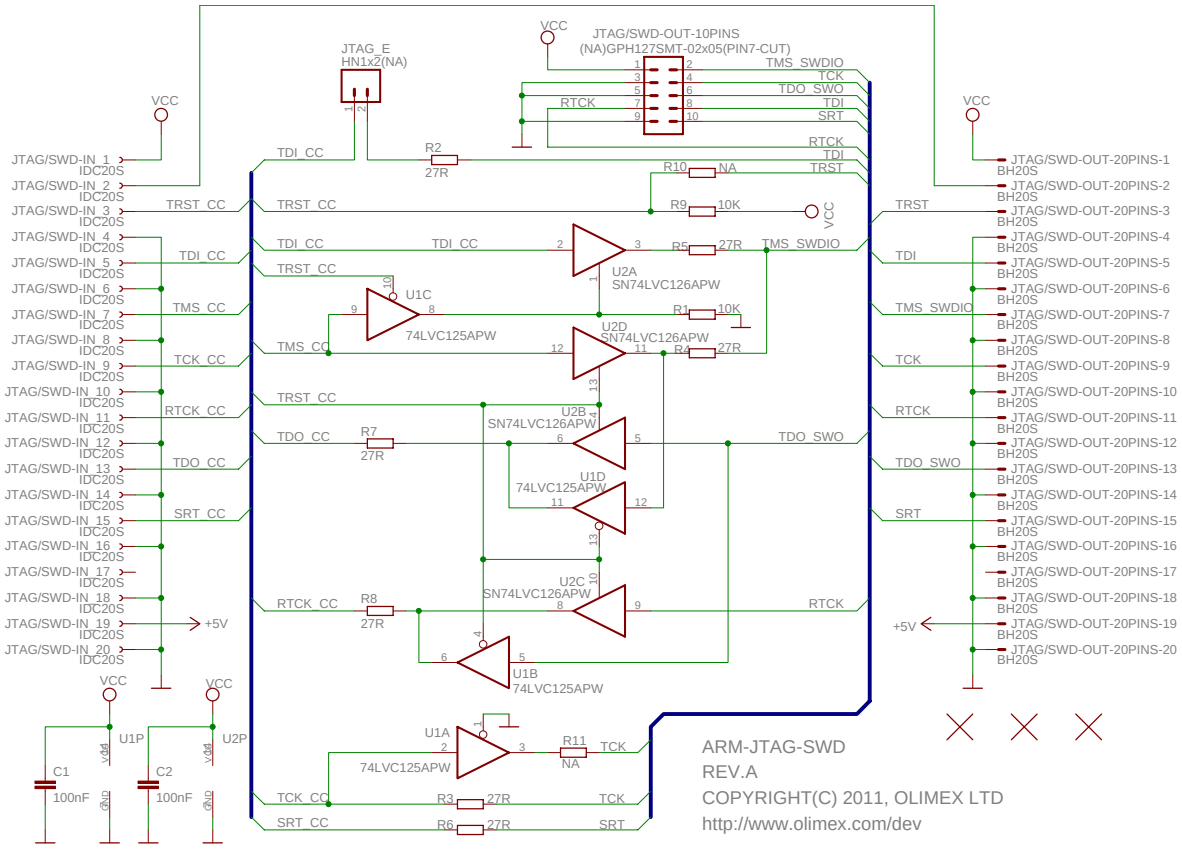
JTAG/SWD-OUT-10PINS
(NA)GPH127SMT-02x05(PIN7-CUT)
JTAG_E
HN1x2(NA)
VCC
TMS_SWDIO
TCK
TDO_SWO
TDI
SRT
RTCK
TRST
R2
27R
R10
NA
R9
10K
R5
27R
R1
10K
R4
27R
R7
27R
R8
27R
R11
NA
R3
27R
R6
27R
U1C
74LVC125APW
U2A
SN74LVC126APW
U2D
SN74LVC126APW
U2B
SN74LVC126APW
U1D
74LVC125APW
U2C
SN74LVC126APW
U1B
74LVC125APW
U1A
74LVC125APW
U1P
U2P
C1
100nF
C2
100nF
+5V
TDI_CC
TRST_CC
TMS_CC
TCK_CC
RTCK_CC
TDO_CC
SRT_CC
JTAG/SWD-IN_1 IDC20S
JTAG/SWD-IN_2 IDC20S
JTAG/SWD-IN_3 IDC20S
JTAG/SWD-IN_4 IDC20S
JTAG/SWD-IN_5 IDC20S
JTAG/SWD-IN_6 IDC20S
JTAG/SWD-IN_7 IDC20S
JTAG/SWD-IN_8 IDC20S
JTAG/SWD-IN_9 IDC20S
JTAG/SWD-IN_10 IDC20S
JTAG/SWD-IN_11 IDC20S
JTAG/SWD-IN_12 IDC20S
JTAG/SWD-IN_13 IDC20S
JTAG/SWD-IN_14 IDC20S
JTAG/SWD-IN_15 IDC20S
JTAG/SWD-IN_16 IDC20S
JTAG/SWD-IN_17 IDC20S
JTAG/SWD-IN_18 IDC20S
JTAG/SWD-IN_19 IDC20S
JTAG/SWD-IN_20 IDC20S
JTAG/SWD-OUT-20PINS-1 BH20S
JTAG/SWD-OUT-20PINS-2 BH20S
JTAG/SWD-OUT-20PINS-3 BH20S
JTAG/SWD-OUT-20PINS-4 BH20S
JTAG/SWD-OUT-20PINS-5 BH20S
JTAG/SWD-OUT-20PINS-6 BH20S
JTAG/SWD-OUT-20PINS-7 BH20S
JTAG/SWD-OUT-20PINS-8 BH20S
JTAG/SWD-OUT-20PINS-9 BH20S
JTAG/SWD-OUT-20PINS-10 BH20S
JTAG/SWD-OUT-20PINS-11 BH20S
JTAG/SWD-OUT-20PINS-12 BH20S
JTAG/SWD-OUT-20PINS-13 BH20S
JTAG/SWD-OUT-20PINS-14 BH20S
JTAG/SWD-OUT-20PINS-15 BH20S
JTAG/SWD-OUT-20PINS-16 BH20S
JTAG/SWD-OUT-20PINS-17 BH20S
JTAG/SWD-OUT-20PINS-18 BH20S
JTAG/SWD-OUT-20PINS-19 BH20S
JTAG/SWD-OUT-20PINS-20 BH20S
ARM-JTAG-SWD
REV.A
COPYRIGHT(C) 2011, OLIMEX LTD
http://www.olimex.com/dev