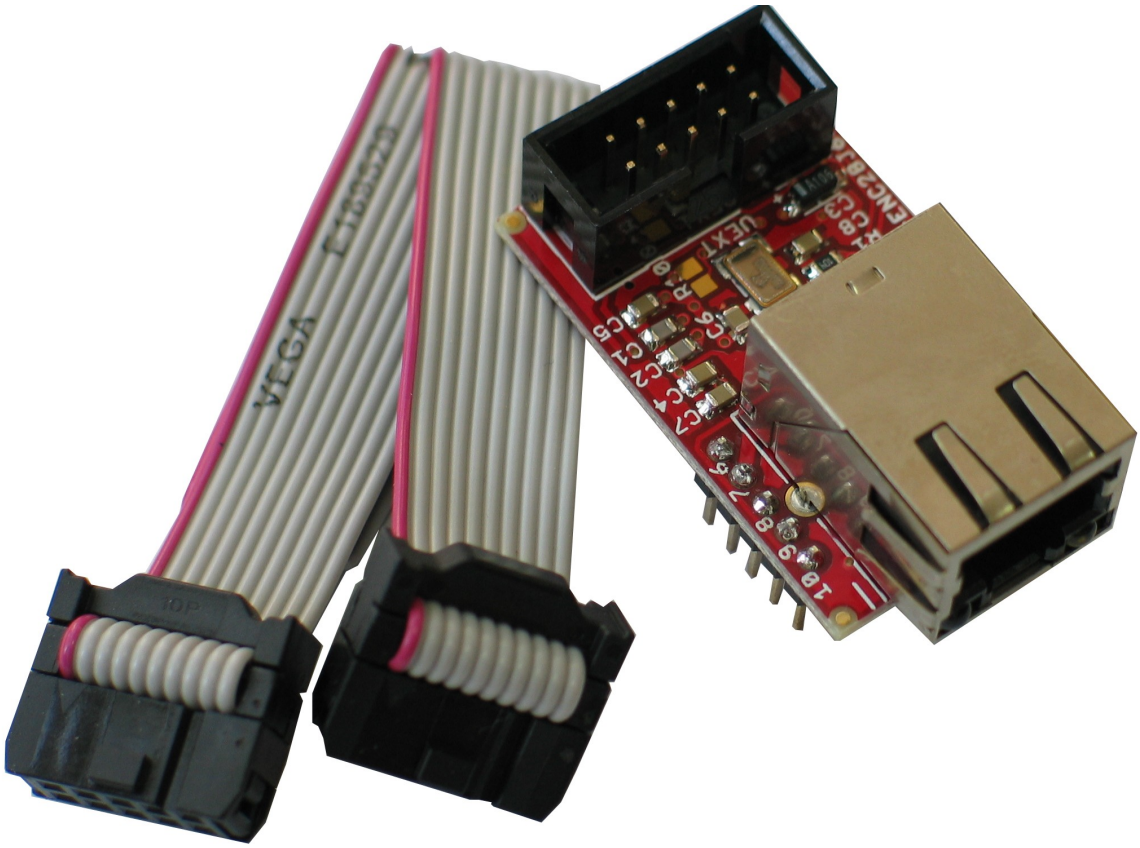

MOD-ENC28J60 development board

Users Manual

Pb-free, Green All boards produced by Olimex are ROHS compliant

Rev. Initial, November 2008

Copyright(c) 2008, OLIMEX Ltd, All rights reserved

INTRODUCTION

MOD-ENC28J60 is development board with UEXT connector and 10 Mbit ENC28J60 ethernet controller from Microchip Technology Inc.

BOARD FEATURES

- MOD-ENC28J60 is the easiest way to add 10 Mbit ethernet connectivity to any of our boards with UEXT connector
- ENC28J60 Ethernet controller with UEXT connector for easy connection to our other development boards with UEXT connector
- LAN connecttor with build in transformer
- two status LEDs on LAN connector
- SPI interface takes only few pins to add Ethernet interface to your microcontroller project
- UEXT 10 pin interface on 0.1" row pins header
- backward compatibility with ENC28J60-H with 2 x 5 pin header
- PCB: FR-4, 1.5 mm (0,062"), green soldermask, white silkscreen component print
- Dimensions: 40x24 mm (1.55 x 0.95")
- space between the pin rows: 20 mm (0.8")

ELECTROSTATIC WARNING

The MOD-ENC28J60 board is shipped in protective anti-static packaging. The board must not be subject to high electrostatic potentials. General practice for working with static sensitive devices should be applied when working with this board.

BOARD USE REQUIREMENTS

Hardware: Our development boards PIC-WEB and PIC-MINI-WEB use ENC28J60

Ethernet Controller Features

MOD-ENC28J60 board use ENC28J60 stand-alone ethernet controller with these features:

- IEEE 802.3. Compatible Ethernet Controller
- Fully Compatible with 10/100/1000Base-T Networks
- Integrated MAC and 10Base-T PHY
- Supports One 10Base-T Port with Automatic Polarity Detection and Correction
- Supports Full and Half-Duplex modes
- Programmable Automatic Retransmit on Collision
- Programmable Padding and CRC Generation
- Programmable Automatic Rejection of Erroneous Packets
- SPI Interface with Clock Speeds Up to 20 MHz

BLOCK DIAGRAM

ENC28J60 BLOCK DIAGRAM

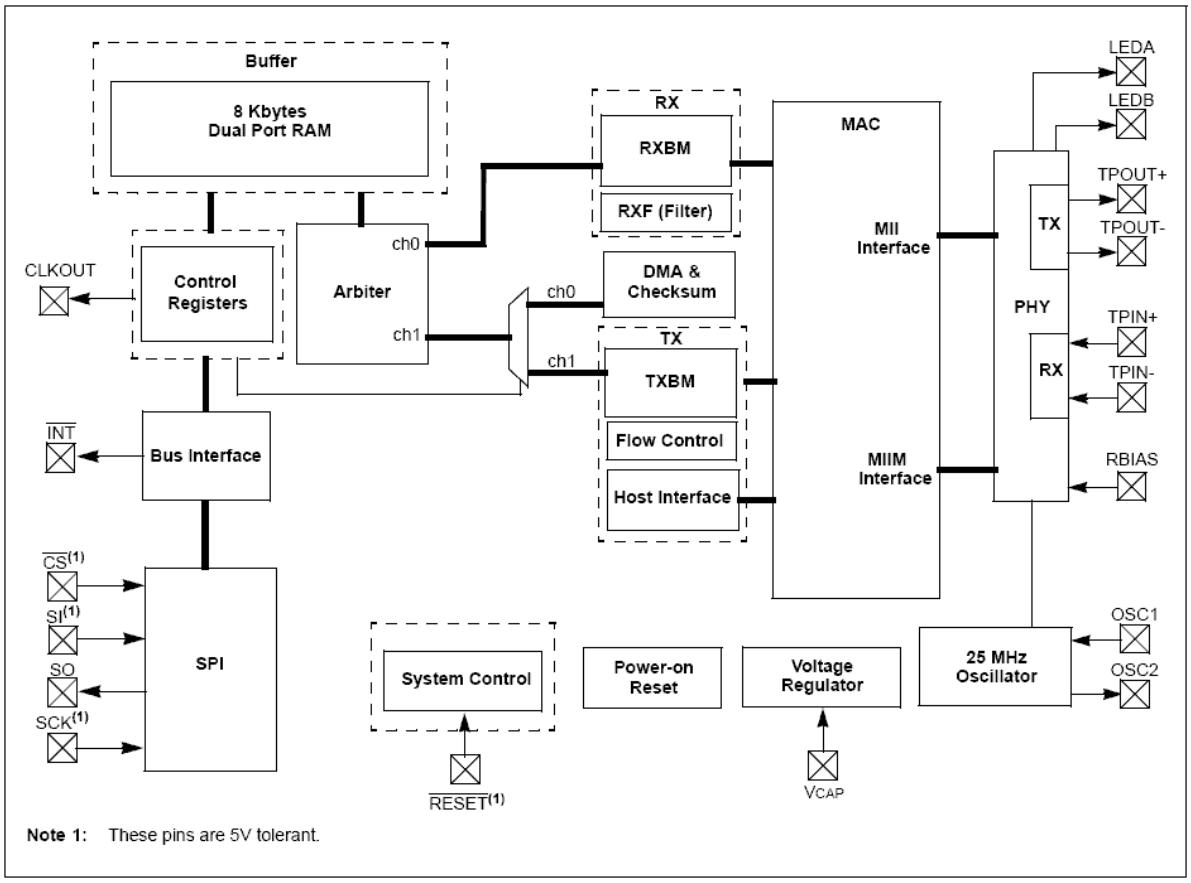

Note 1: These pins are 5V tolerant.

MEMORY MAP

ENC28J60 MEMORY ORGANIZATION

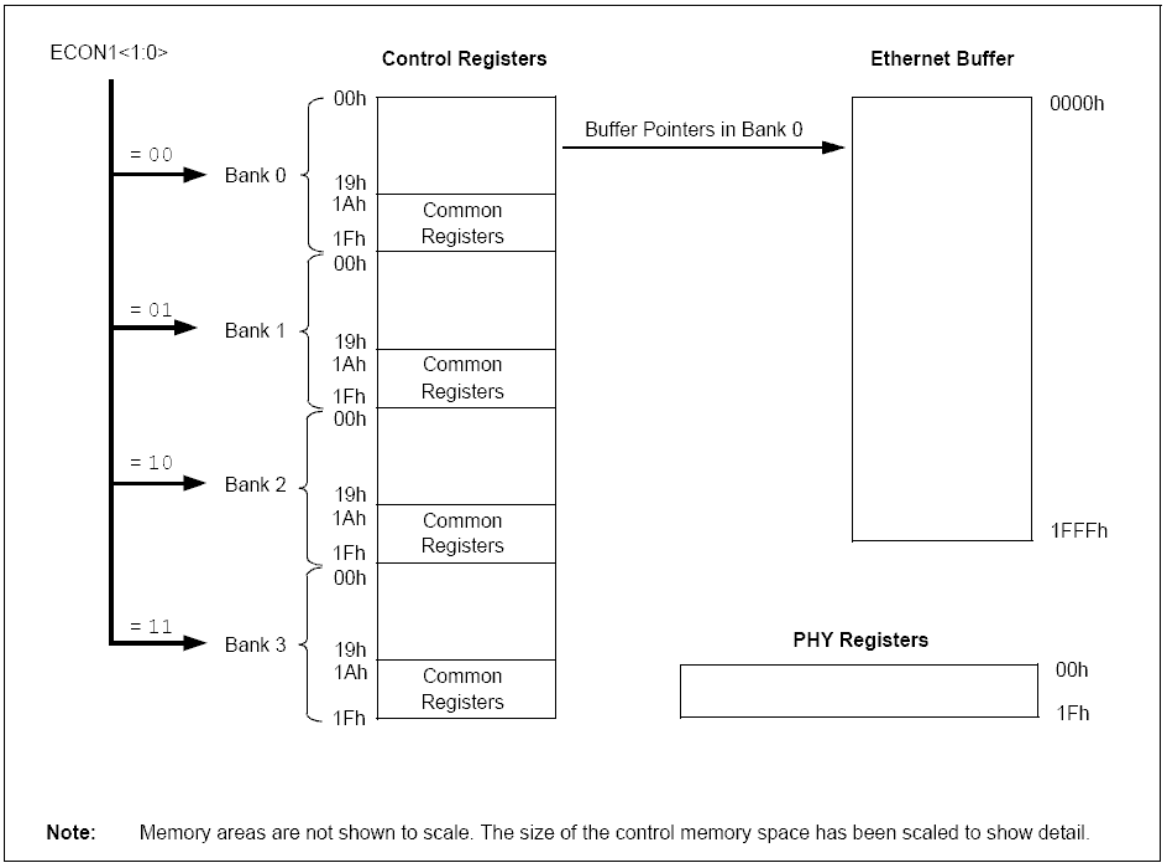

Note: Memory areas are not shown to scale. The size of the control memory space has been scaled to show detail.

SCHEMATIC

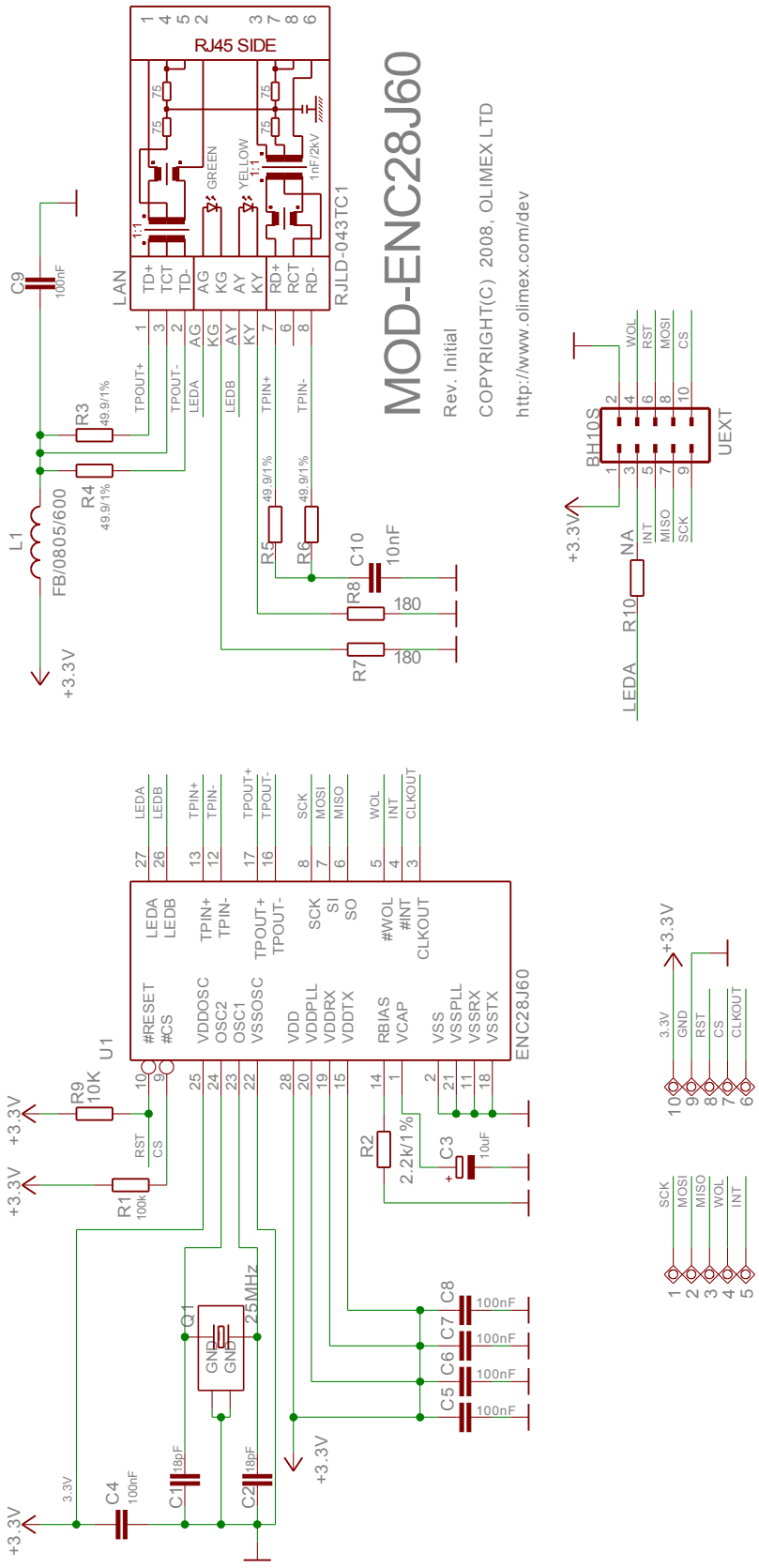

RJ45 SIDE
LAN
RJLD-043TC1
MOD-ENC28J60
Rev. Initial
COPYRIGHT(C) 2008, OLIMEX LTD
http://www.olimex.com/dev
BH10S
UEXT
ENC28J60
U1
Q1
25MHz
L1
FB/0805/600
+3.3V

BOARD LAYOUT

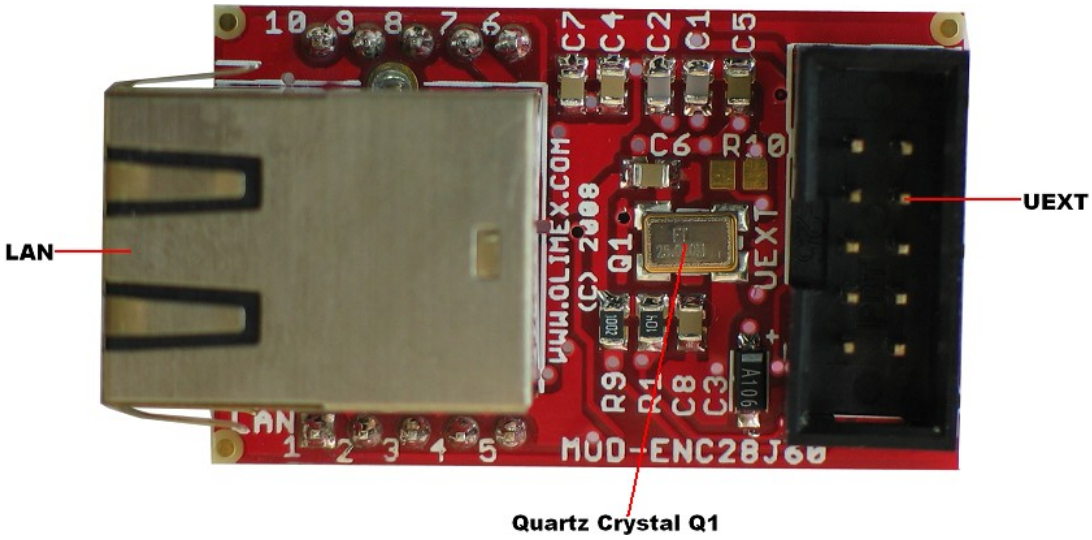

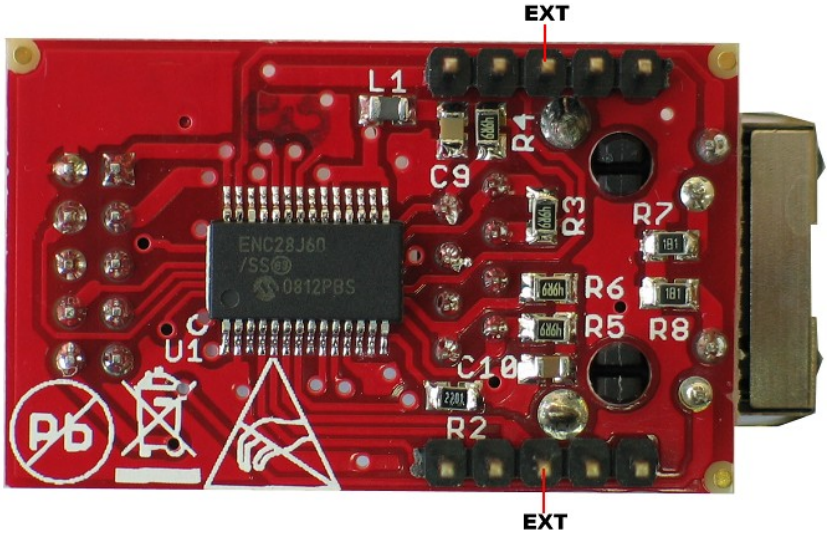

POWER SUPPLY CIRCUIT

MOD-ENC28J60 is typically power supplied by UEXT pin 1 and pin 2 and by EXT pin 10 and pin 9.

RESET CIRCUIT

MOD-ENC28J60 reset circuit includes pin 6 of UEXT connector, pin 10 of U1 and R9 (10k).

CLOCK CIRCUIT

Quartz crystal 25 MHz is connected to **ENC28J60** pin 23 (OSC1) and pin24 (OSC2).

JUMPER DESCRIPTION

There are no jumpers on this board.

CONNECTOR DESCRIPTIONS

UEXT

Pin #	Signal Name
1	3.3V
2	GND
3	LEDA
4	WOL
5	INT
6	RST
7	MISO
8	MOSI
9	SCK
10	CS

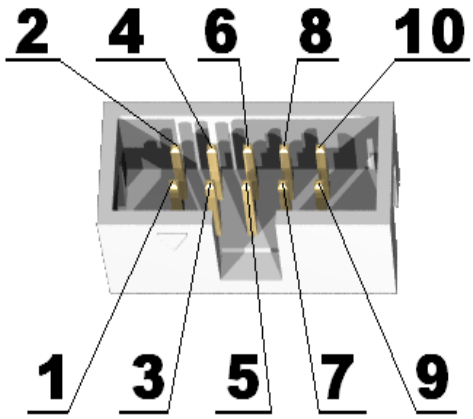

LAN

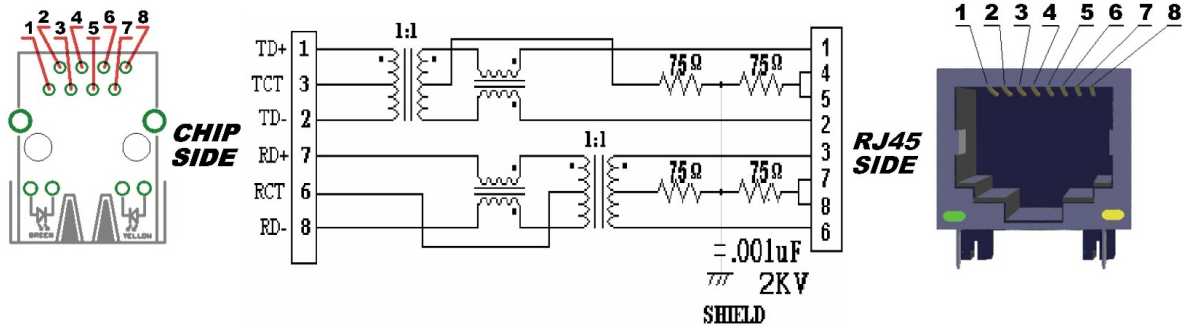

Pin #	Signal Name Chip Side	Pin #	Signal Name Chip Side
1	TX+	5	Not Connected (NC)
2	TX-	6	VDD
3	VDD	7	RX+
4	Not Connected (NC)	8	RX-

LED	Color	Usage
Right	Green	Link status
Left	Yellow	Activity status

EXT

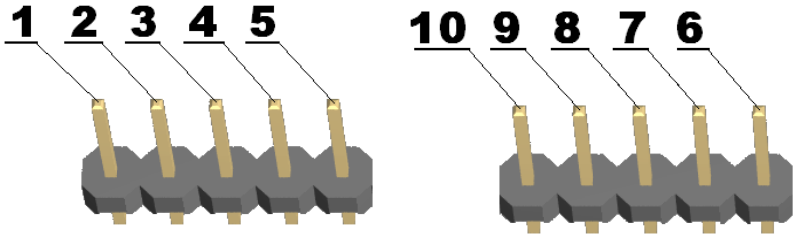

Pin#	Signal Name	Pin#	Signal Name
1	SCK	6	CLKOUT
2	MOSI	7	CS
3	MISO	8	RST
4	WOL	9	GND
5	INT	10	3.3V

MECHANICAL DIMENSIONS

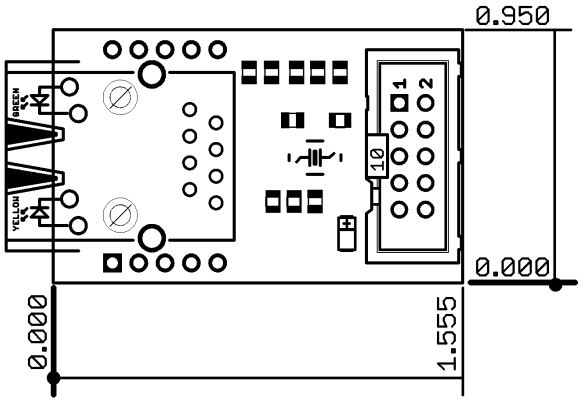

All measures are in inches.

AVAILABLE DEMO SOFTWARE

- Microchip's TCP-IP stack full featured TCP-IP stack, very easy to configure and use with PIC microcontrollers.
- AVR fans now have also demo code for driving ENC28J60 with Bascom thanks to Ben Zijlstra from Netherlands
- uIP1.0 demo code with LPC-P2106 and ENC28J60-H for CrossWorks written by Iain Derrington

ORDER CODE

MOD-ENC28J60 – completely assembled and tested, includes ENC28J60 Ethernet controller

How to order?
You can order to us directly or by any of our distributors.
Check our web www.olimex.com/dev for more info.

Revision history:

REV. Initial - create November 2008

Disclaimer:

© 2008 Olimex Ltd. All rights reserved. Olimex®, logo and combinations thereof, are registered trademarks of Olimex Ltd. Other terms and product names may be trademarks of others.

The information in this document is provided in connection with Olimex products. No license, express or implied or otherwise, to any intellectual property right is granted by this document or in connection with the sale of Olimex products.

Neither the whole nor any part of the information contained in or the product described in this document may be adapted or reproduced in any material from except with the prior written permission of the copyright holder.

The product described in this document is subject to continuous development and improvements. All particulars of the product and its use contained in this document are given by OLIMEX in good faith. However all warranties implied or expressed including but not limited to implied warranties of merchantability or fitness for purpose are excluded.

This document is intended only to assist the reader in the use of the product. OLIMEX Ltd. shall not be liable for any loss or damage arising from the use of any information in this document or any error or omission in such information or any incorrect use of the product.