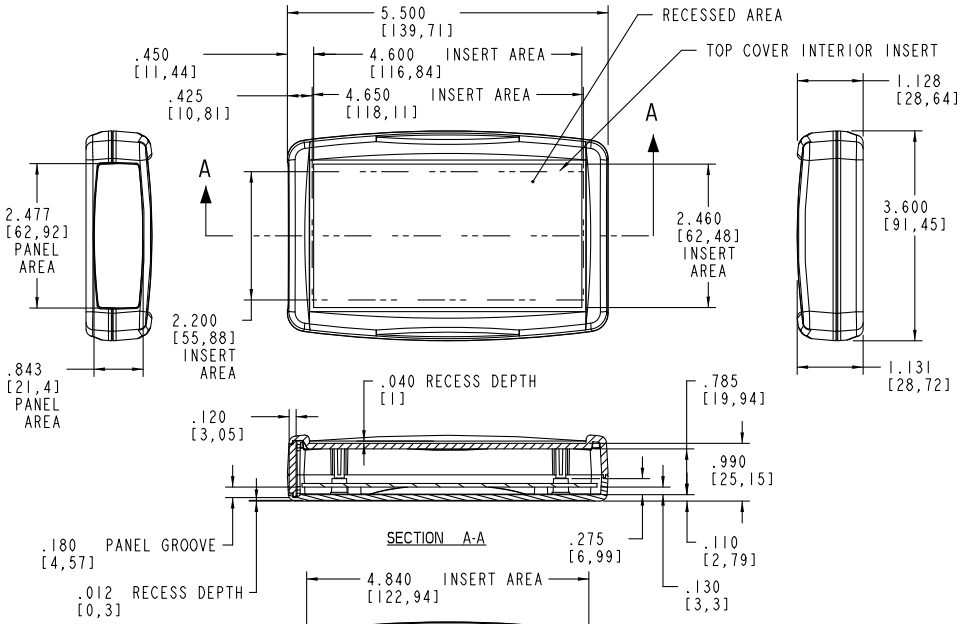

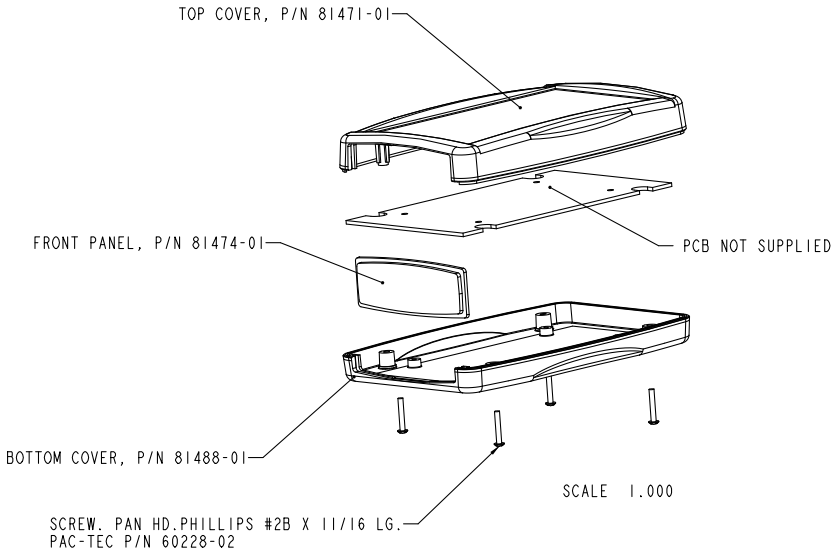

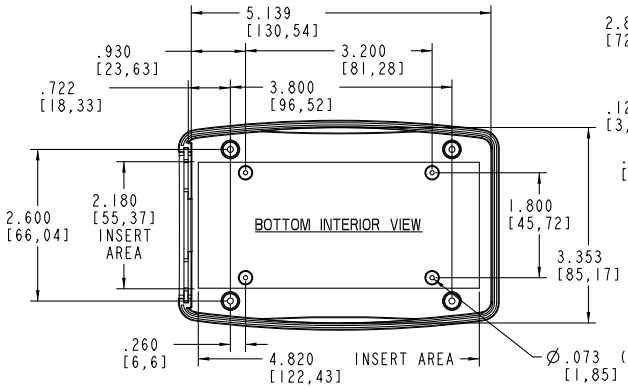

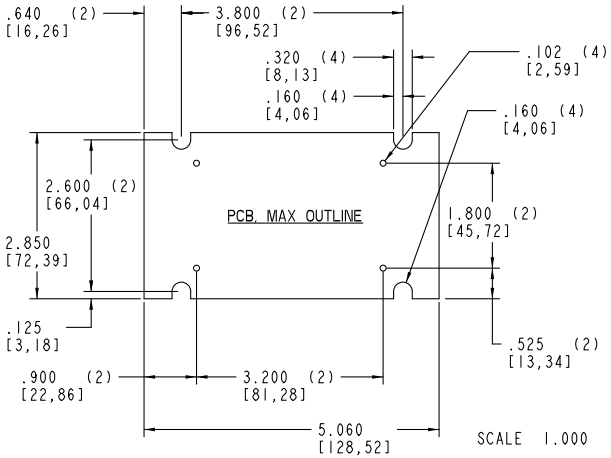

SUGGESTED PCB MTG. SCREW
PHP #2B X 1/4 LG.
WITH A #2 PLASTIC WASHER.

SCALE 1.000

PACTEC®
1-610-361-4200

XP

VISIT PACTEC®
ON THE WORLD WIDE WEB
www.pactecenclosures.com

COLOR / MATERIAL CODE		
COLOR	94HB	94V0
BLACK	000	028
P.C.BONE	039	060

DRAWING NUMBER	REV
81538	A