Different Terminal

R13-87: CQC, EK10, VDE, c UL us, SP

R13-117: EK10, VDE, c UL us, SP

R13-87

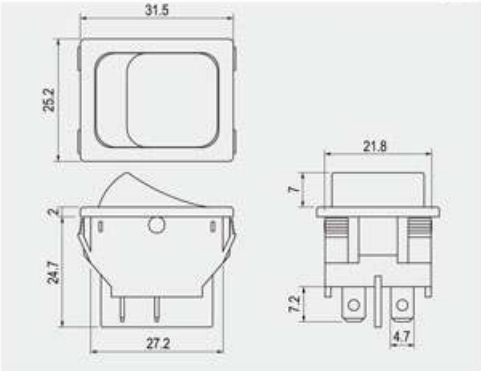

Rating
16A 125V AC 1/3HP 10A 250V AC 1/2HP
Contact resistance
50mΩ Max
Insulation resistance
DC 500V 100MΩ Min
Dielectric strength
AC 1500V 1 minute
Cut-out

X

Y

	X	Y
0.75~1.25	30.2-0.1	22.2+0.1
1.25~2	30.4-0.1	22.2+0.1
2~3	30.8-0.1	22.2+0.1

R13-117

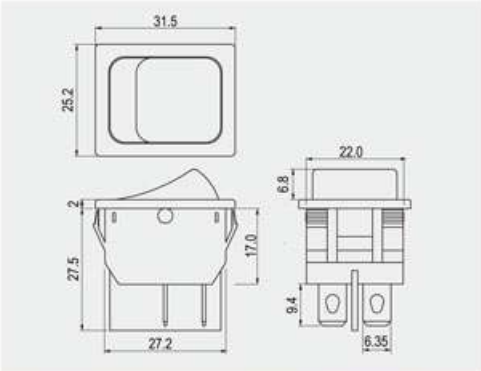

FEATURES

* MATERIAL: Frame is nylon (UL flame: 94V-2). Terminals are silver plated brass.
* Illuminated actuators are molded in PC, available with red, amber, green, blue and white colors.
* Snap-in mounting, easy to install switch into panel.
* Waterproof cover is optional.

IP55

For waterproof cover, Pls refer to page 1-3 (R13-87-28)

R13- 87 _ - 0 2

R13-117 _ - 0 1

FUNCTION		TERMINAL
A 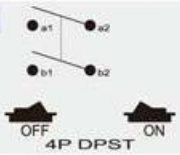 4P DPST	D 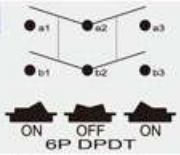 6P DPDT	0 1 .250" SQ For R13-117 only
B 4P DPST (ILLUMINATED) 125VAC 33KΩ / 250VAC 150KΩ	H 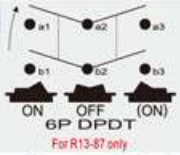 6P DPDT For R13-87 only	0 2 .187" SQ For R13-87 only
C 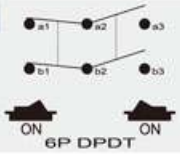 6P DPDT	I 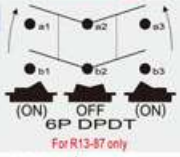 6P DPDT For R13-87 only	

* ( ) =momentary