● *SERIES HK04*

■ RATING

0.2 A 60VDC

■ DIMENSIONS (Unless otherwise specified, a tolerance of ±0.4 mm applies to all dimensions.)

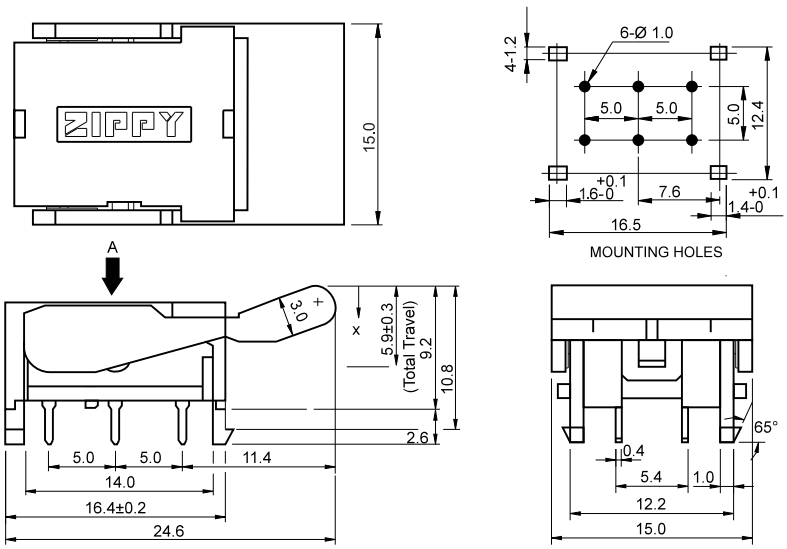

■ SPECIFICATIONS

- Operating force ..... Max. 80g(A,B button type)
  Max. 100g(C button type)
- Contact resistance (initial) ..... 100mΩ Max.
- Insulation resistance (at 500VDC) ..... 100MΩ Min.
- Service life
  Electrical (at 0.2Amp load) .....300,000 operations Min.
  Electrical (at 0.1Amp load) .....500,000 operations Min.
  Mechanical .....500,000 operations Min.
- Operating frequency .....10~30 operations/min
- Storage temperature ..... -25°C to +85°C
- Storage humidity ..... 95% RH Max.

■ CIRCUIT DIAGRAM

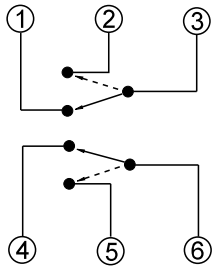

(SEEN FROM DIRECTION A)

■ SWITCH SEQUENCE

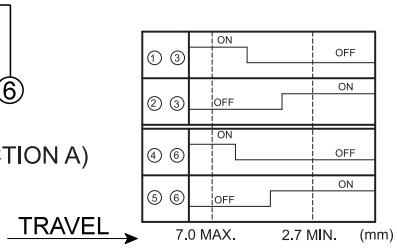

■ ORDERING INFORMATION

H K 0 4 — 2 2 A

SERIES PREFIX

CODE	NUMBER OF POLES
2	2 POLES

CODE	CIRCUIT ARRANGEMENT
2	2 D.T.

CODE	BUTTON TYPE
A	
B	
C	