| DATE | DESCRIPTION | REV. |
|---|---|---|
| 9.10.99 | CHANGE AS PER ECN 99–64 | A |
| 8.10.00 | CHANGE AS PER ECN 00–079 | B |
| 5.13.03 | CHANGE AS PER ECN 03–038 | C |
| 9.11.09 | CHANGE AS PER ECN 09–124 | D |
| 7.06.10 | CHANGE AS PER ECN 10–050 | E |
| 7.06.10 | CHANGE AS PER ECN 12–098 | F |
| 10.01.14 | CHANGE AS PER ECN 14–106 | G |

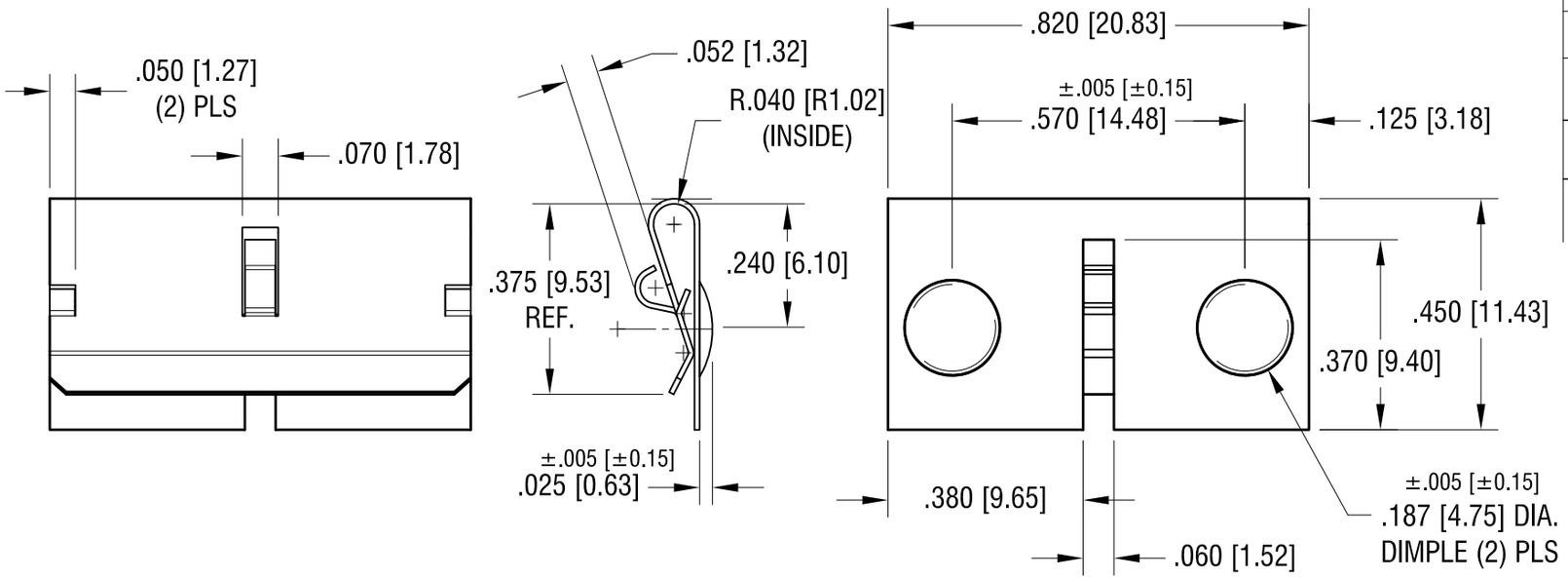


NOTE:

1. HEAT TREAT TO SPRING TEMPER
2. DESIGNED TO CLIP OVER PANELS
   FROM .060 [1.52] THRU .070 [1.78] TH'K.

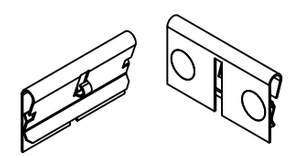

ACTUAL SIZE

THIS DOCUMENT IS THE PROPERTY OF KEYSTONE ELECTRONICS CORP. AND SHALL NOT BE REPRODUCED, DISTRIBUTED OR USED AS A BASIS FOR MANUFACTURE WITHOUT PRIOR WRITTEN PERMISSION FROM KEYSTONE ELECTRONICS CORP.

**KEYSTONE ELECTRONICS CORP.**
www.keyelco.com • ASTORIA, N.Y. 11105-2017 • Tel (718) 956-8900

PART NAME: 'A-A' MALE/MALE BATTERY CONTACT

MATERIAL: .010 [0.25] TH'K ANNEALED SPRING STEEL

FINISH: NICKEL PLATE

DRN BY: BOONE | DATE: 3.16.99

APP'D: LN | SCALE: 3X

TOLERANCES INCH [MM]
DECIMAL ± .010 [± .025 ]
ANGULAR ± 1°
UNLESS OTHERWISE SPECIFIED

CODE: C

DWG NO. 292