This hardware design by Olimex LTD is licensed under a Creative Commons Attribution-ShareAlike 3.0 Unported License.

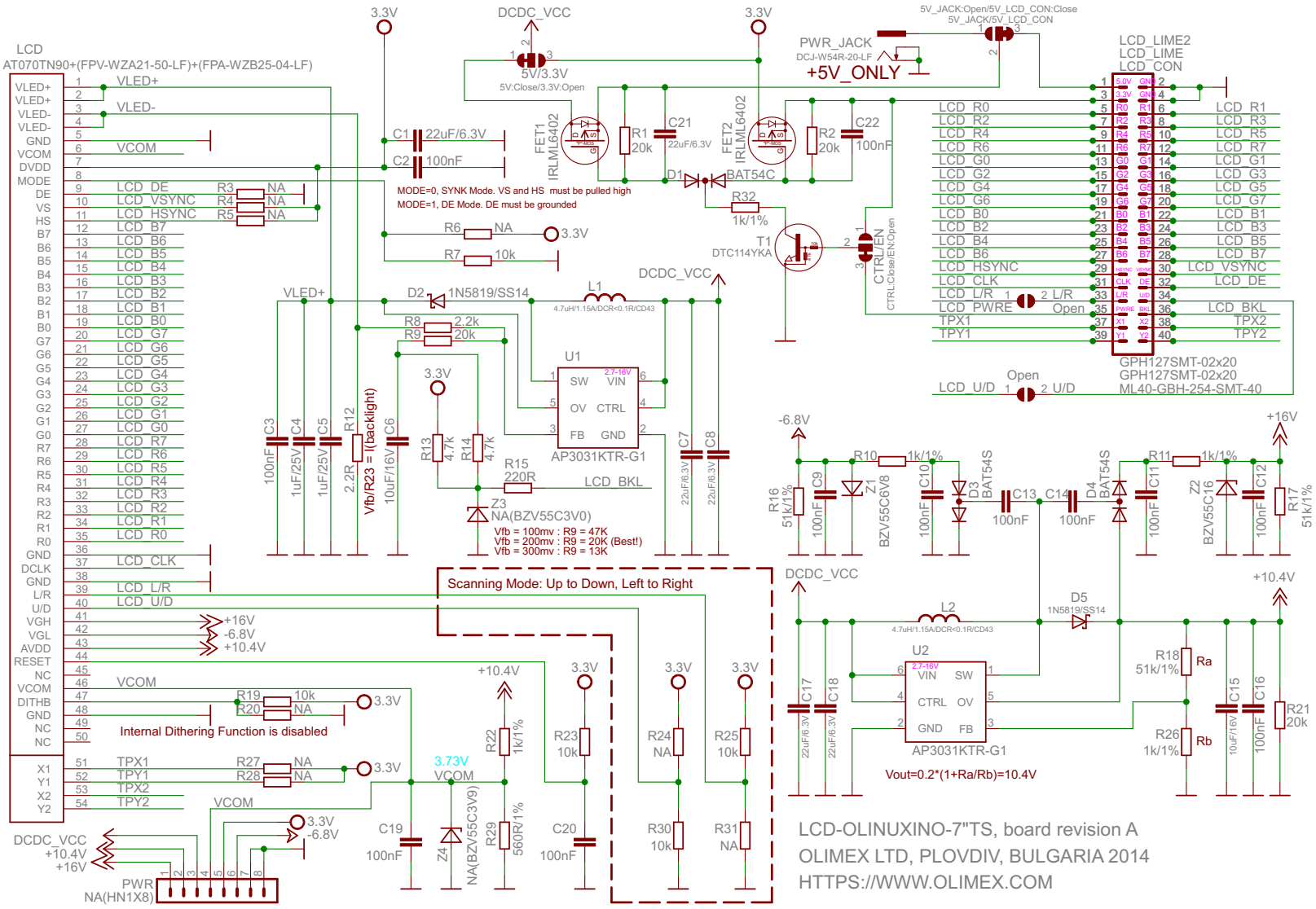

LCD-OLINUXINO-7"TS, board revision A
OLIMEX LTD, PLOVDIV, BULGARIA 2014
HTTPS://WWW.OLIMEX.COM

This hardware design by Olimex LTD is licensed under a Creative Commons Attribution-ShareAlike 3.0 Unported License.